INDEX OF SHEETS
SEE SHEET NO. 2

ADDENDUMS AND RED LINE REVISIONS
1 REVISION NO. 1
SHEET NOS. 1,2,17,22-26. 02/23/09

Maryland Department of Transportation

STATE HIGHWAY ADMINISTRATION

PRESTRESSED CONCRETE SLAB PANEL BRIDGE NO. 19005 ON MD 362 (MOUNT VERNON ROAD) OVER MONIE CREEK

S.H.A. CONTRACT NO.: SO4215180
F.A.P. CONTRACT NO.: AC-BR-1369(3)E

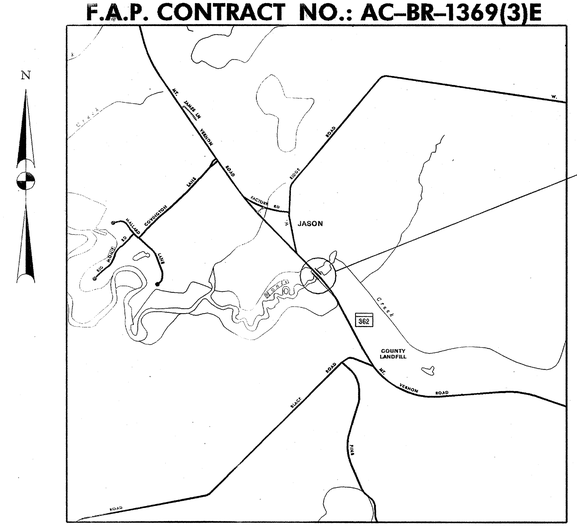

BRIDGE NO. 19005
ON MD 362
OVER MONIE CREEK

SOMERSET COUNTY

LOCATION MAP
SCALE : 1" = 2000'

FOR THE CONVENIENCE AND INFORMATION OF BIDDERS PRINTS OF PLANS OF EXISTING PERTINENT STRUCTURE(S) ARE INCLUDED WITH THIS CONTRACT. NO RESPONSIBILITY FOR THEIR ACCURACY OR COMPLETENESS IS ASSUMED BY THE STATE HIGHWAY ADMINISTRATION. DIMENSIONS, DETAILS, ETC., AS SHOWN THEREON MAY NOT BE AS BUILT.

INCLUDED FOR YOUR USE ARE SHEET 11 OF CONTRACT NO. S074 AND SHEETS 1-4 OF CONTRACT NO. S203-010-120.

CONVENTIONAL SIGNS

STATE, COUNTY OR CITY LINES
PROPOSED TRAFFIC BARRIER
EXISTING TRAFFIC BARRIER
FENCE LINE
RIGHT OF WAY LINE
EXISTING ROADWAY
RAILROAD
BASE OR SURVEY LINE
FIRE HYDRANT
PROPOSED CULVERT
EXISTING CULVERT
EXISTING DROP INLET
UTILITY POLE
MARSH
HEDGE
INLET PROTECTION
GROUND ELEVATION
GRADE ELEVATION

INTERCEPTOR BERM
TEMPORARY BERM
TEMPORARY SLOPE DRAIN
SILT FENCE
STRAW BALE STRUCTURE
PLACED RIPRAP DITCH
TEMPORARY STONE OUTLET STRUCTURE
GABIONS
TEMPORARY SEDIMENT TRAP WITH SILT FENCE
TEMPORARY SEDIMENT TRAP WITH STRAW BALES
TEMPORARY SEDIMENT TRAP WITH STONE OUTLET STRUCTURE
TEMPORARY SEDIMENT TRAP WITH RIPRAP OUTLET STRUCTURE

DESIGN TRAFFIC DATA

	2005	2030 (EST.)
A.D.T.	1700	2800
D.H.V.	9%	9%
DIRECTIONAL DISTRIBUTION	65%	65%
PERCENT TRUCKS-A.D.T.	8%	8%
PERCENT TRUCKS-D.H.V.	7%	7%
DESIGN SPEED	50 MPH	50 MPH
FUNCTIONAL CLASSIFICATION	RURAL MAJOR COLLECTOR	

STANDARD SPECIFICATION BOOK, BOOK OF STANDARDS AND MUTCD

ALL WORK ON THIS PROJECT SHALL CONFORM TO THE MARYLAND DEPARTMENT OF TRANSPORTATION, STATE HIGHWAY ADMINISTRATION'S SPECIFICATIONS ENTITLED STANDARD SPECIFICATIONS FOR CONSTRUCTION AND MATERIAL DATED JANUARY 2001 OR ADDITIONS THERETO; THE SPECIAL PROVISIONS INCLUDED IN THE INVITATION FOR BIDS BOOK; THE ADMINISTRATIONS BOOK OF STANDARDS FOR HIGHWAYS AND INCIDENTAL STRUCTURES AND THE LATEST MANUAL ON UNIFORM TRAFFIC CONTROL DEVICES (MUTCD).

UTILITIES:

THE LOCATION OF UTILITIES SHOWN ON THE PLANS ARE FOR INFORMATION AND GUIDANCE ONLY, NO GUARANTEE IS MADE AS TO THE ACCURACY OF SAID LOCATIONS.

ENVIRONMENTAL INFORMATION:

MARYLAND DEPARTMENT OF THE ENVIRONMENT NO. 09-SF-0023

ALL STORMWATER MANAGEMENT FACILITIES CONSTRUCTED FOR CONTRACT NO. SO4215180 SHALL BE INSPECTED AND MAINTAINED IN ACCORDANCE WITH THE STATE HIGHWAY ADMINISTRATION'S BEST MANAGEMENT PRACTICES (BMP) INSPECTION AND REMEDIATION PROGRAM.

SEDIMENT AND EROSION CONTROL REGULATIONS WILL BE STRICTLY ENFORCED DURING CONSTRUCTION.

OWNERS / DEVELOPERS CERTIFICATION:

I/WE HEREBY CERTIFY THAT ANY CLEARING, GRADING, CONSTRUCTION AND/OR DEVELOPMENT WILL BE DONE PURSUANT TO THIS PLAN, AND THAT ANY RESPONSIBLE PERSONNEL INVOLVED IN THE CONSTRUCTION PROJECT WILL HAVE A CERTIFICATE OF ATTENDANCE AT A MARYLAND DEPARTMENT OF THE ENVIRONMENT APPROVED TRAINING PROGRAM FOR THE CONTROL OF SEDIMENT AND EROSION BEFORE BEGINNING THE PROJECT. I HEREBY AUTHORIZE THE RIGHT OF ENTRY FOR PERIODIC ON-SITE EVALUATION BY STATE OF MARYLAND, DEPARTMENT OF THE ENVIRONMENT, COMPLIANCE INSPECTORS.

COMPLETENESS OF DOCUMENTS:

THE STATE HIGHWAY ADMINISTRATION SHALL ONLY BE RESPONSIBLE FOR THE COMPLETENESS OF DOCUMENTS OBTAINED DIRECTLY FROM THE STATE HIGHWAY ADMINISTRATION CASHIER'S OFFICE. FAILURE TO ATTACH ADDENDA MAY CAUSE THE BID TO BE IRREGULAR.

RIGHT-OF-WAY:

RIGHT OF WAY AND EASEMENT LINES SHOWN ON THESE PLANS ARE FOR ASSISTANCE IN INTERPRETING THE PLANS. THESE LINES DO NOT REPRESENT THE OFFICIAL PROPERTY ACQUISITION LINES. FOR OFFICAL FEE RIGHT OF WAY AND EASEMENT INFORMATION, SEE APPROPRIATE RIGHT OF WAY PLAT.

R-O-W PLAT NUMBER(S):

22592,22593,22594

DATUMS:

VERTICAL: NAVD 88
HORIZONTAL: NAD 83 / 91

"AS BUILT"
R.L.M. 1/15/2010

REVIEWED AND APPROVAL RECOMMENDED
Gene C. Vaughan 9/2/08
CHIEF, BRIDGE DESIGN DIVISION

APPROVAL RECOMMENDED
E. S. Freedman 9/02/08
DIRECTOR, OFFICE OF BRIDGE DEVELOPMENT

APPROVED
9/02/08
DEPUTY ADMINISTRATOR /CHIEF ENGINEER OF PLANNING ENGINEERING, RIGHT-OF-WAY AND ENVIRONMENT

OTHER CONTRACTS FOR THIS STRUCTURE

STRUCTURE INVENTORY NO. 19005 | SURVEY BOOK NO. 31496 | S:\CADD\OBD\1900500\001_19005TTL.dgn PRINT DATE: Tuesday, September 02, 2008 at 11:04:31 AM | INDEXED

INDEX OF SHEETS

SHEET NO.	DRAWING NO.	
[1] 1.		TITLE SHEET
[1] 2.		INDEX OF SHEETS
3.	TS–1	ROADWAY TYPICAL SECTIONS
4.	RG–1	ROADWAY GEOMETRIC PLAN
5.	RP–1	ROADWAY PLAN DETAILS
6.	RG–2	ROADWAY PROFILE
7.	ES–1	EROSION AND SEDIMENT CONTROL DETAILS
8.	ES–2	EROSION AND SEDIMENT CONTROL PLAN
9.	D–1	DETOUR PLAN
10.–11.	D–2 – D–3	DETOUR DETAILS
12.	D–4	DETOUR ROADWAY SIGNS
13.	FM–1	FINAL SIGNING AND PAVEMENT MARKING DETAILS
14.	S–1	GENERAL PLAN AND ELEVATION
15.	S–2	HYDROLOGIC AND HYDRAULIC DATA
16.	S–3	GEOMETRIC LAYOUT
[1] 17.	S–4	SEQUENCE OF CONSTRUCTION / OPTION NOTES

PRECAST OPTION

18.	S–5	PRECAST ABUTMENT CAP – SEQ. OF CONSTRUCTION
19.	S–6	PILE LAYOUT
20.	S–7	ABUTMENT A – PLAN AND ELEVATION
21.	S–8	ABUTMENT B – PLAN AND ELEVATION
22.	S–9	ABUTMENT DETAILS I
[1] 23.	S–10	ABUTMENT DETAILS II
[1] 24.	S–11	WING WALL ELEVATIONS
[1] 25.	S–12	WING WALL DETAILS
[1] 26.	S–13	SHEET PILE CAP DETAILS

CAST–IN–PLACE OPTION ** OPTION NOT USED**

27.	S–14	CAST–IN–PLACE ABUTMENT CAP – SEQ. OF CONSTRUCTION
28.	S–15	PILE LAYOUT
29.	S–16	ABUTMENT A – PLAN AND ELEVATION
30.	S–17	ABUTMENT B – PLAN AND ELEVATION
31.	S–18	ABUTMENT DETAILS I
32.	S–19	ABUTMENT DETAILS II
33.	S–20	WING WALL ELEVATIONS
34.	S–21	WING WALL DETAILS
35.	S–22	SHEET PILE CAP DETAILS

SHEET NO.	DRAWING NO.	
36.	S–23	TYPICAL SECTION
37.	S–24	FINISHED ROADWAY ELEVATIONS & SLAB LAYOUT
38.	S–25	INTERIOR SLAB
39.	S–26	EXTERIOR SLAB
40.	S–27	SOLID SLAB DETAILS
41.	S–28	TIE ROD, SHEAR KEY, AND BEARING PAD DETAILS
42.	S–29	RAILING AND THRIE BEAM DETAILS
43.–47.	S–30 – S–34	STANDARD DETAILS
48.	S–35	FOUNDATION TEST BORINGS
49.	LD–1	LANDSCAPE PLAN SHEET
50.	LD–2	LANDSCAPE PLAN

SOILS LEGEND

A-3 SAND
A-2-7 CLAYEY SAND
A-7-4 SILTY CLAY
A-2 SAND & FINES
A-7-2 SANDY CLAY
A-7 CLAY
A-2-4 SILTY SAND
A-4 SILT
A-6 COLLOIDAL CLAY
A-4-2 SANDY SILT
A-4-7 CLAYEY SILT
A-5 MICA, DIATOMS

PLAN LOCATION OF SOIL BORINGS

BORING TARGETS AND PROFILES SCALE:
HORIZONTAL - NONE
VERTICAL - SEE PROFILE SHEETS

AO-ABOVE OPTIMUM
SAT-SATURATED
LIQ-LIQUEFIED

TS-TOPSOIL
RM-ROOT MAT
BC-BITUMINOUS CONCRETE
SB-STONE BASE
SC-SOIL CEMENT
PCC-PORTLAND CEMENT CONCRETE
RPPSA - ROCK PENETRATED BY POWER SOIL AUGER

LL-LIQUID LIMIT (%)
PI-PLASTICITY INDEX (%)
NP-NON-PLASTIC
MDD-MAXIMUM DRY DENSITY (pcf)
OMC-OPTIMUM MOISTURE CONTENT (%)
USC-UNIFIED SOIL CLASSIFICATION
USDA-UNITED STATES DEPARTMENT OF AGRICULTURE CLASSIFICATION

w/GR-WITH GRAVEL
w/RF-WITH ROCK FRAGMENTS

NOTES: SOIL SYMBOLS DENOTE MSMT CLASSIFICATIONS

ALL DIMENSIONS, DEPTHS, AND ELEVATIONS ARE NOTED IN FEET

AN ASTERISK AT THE TOP DEPTH OF STRATA INDICATES THAT STRATA WAS VISUALLY CLASSIFIED BY DRILLER

MDD & OMC PER A.A.S.H.T.O. DESIGNATION T-180

UNLESS OTHERWISE NOTED ON PLANS, ALL SOIL SURVEY BORINGS FOR ROADWAY CONSTRUCTION WERE LEFT OPEN FOR 24 HOURS WITH NO EXCESS MOISTURE OR FREE WATER ENCOUNTERED DURING TIME OF SOIL SURVEY (09/10/2007)

REVISIONS
[1] RED LINE NO. 1 REVISED SHEETS. 02/23/09 GLYNIS

STATE OF MARYLAND
DEPARTMENT OF TRANSPORTATION
STATE HIGHWAY ADMINISTRATION
OFFICE OF BRIDGE DEVELOPMENT
PRESTRESSED CONCRETE SLAB PANEL
BRIDGE NO. 19005
ON MD 362 (MOUNT VERNON ROAD)
OVER MONIE CREEK
INDEX OF SHEETS

SCALE AS SHOWN DATE OCT., 2008 CONTRACT SO4215180

DESIGNED BY W.N.P.
DRAWN BY GLYNIS
CHECKED BY JCN
E.S.F. 10-14-08

SHEET NO. 2 OF 50

OTHER CONTRACTS FOR THIS STRUCTURE

STRUCTURE INVENTORY NO. 1900500
SURVEY BOOK NO. 31496

S:\CADD\OBD\1900500\002_19005INDEX.dgn
PRINT DATE: Tuesday, October 06, 2009 at 9:03:03 AM

INDEXED

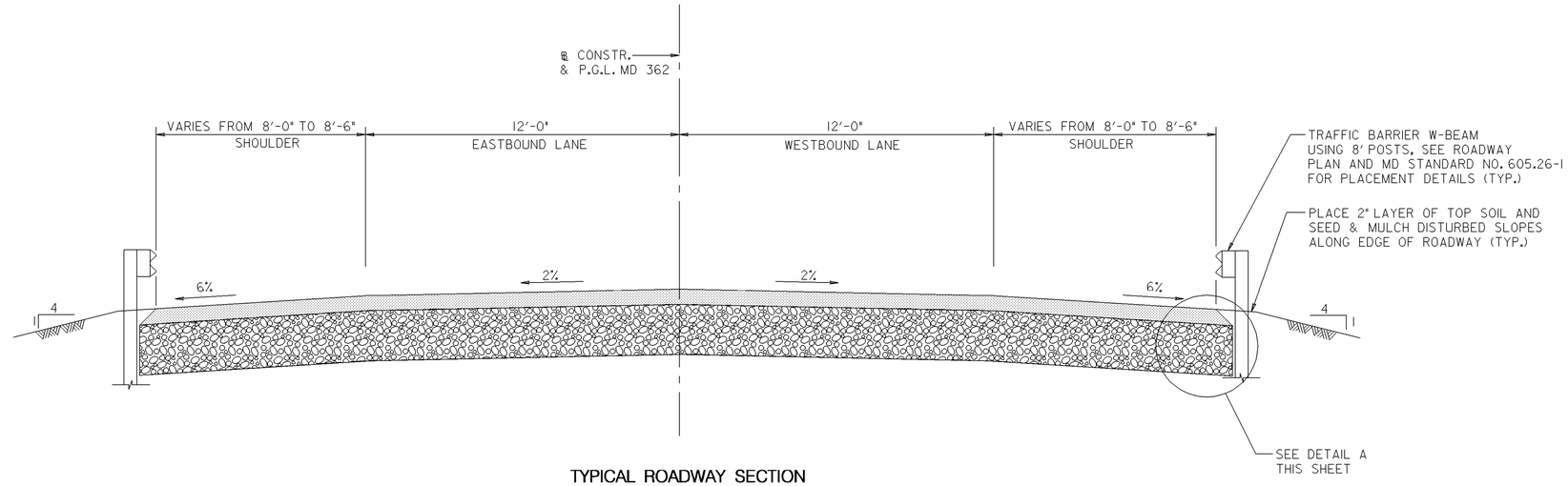

TYPICAL ROADWAY SECTION
(STA. 184+62 TO STA. 184+85)
(STA. 185+44 TO STA. 185+67)

SCALE: 3/8" = 1'-0"

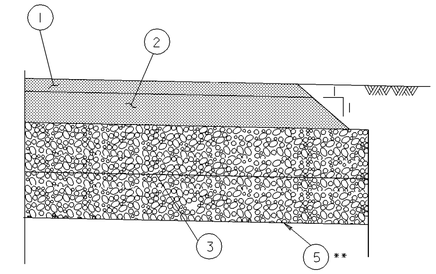

FULL DEPTH PAVEMENT – DETAIL A

SCALE: NONE

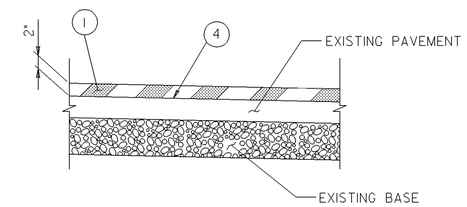

GRINDING AND RESURFACING – DETAIL B

SCALE: NONE

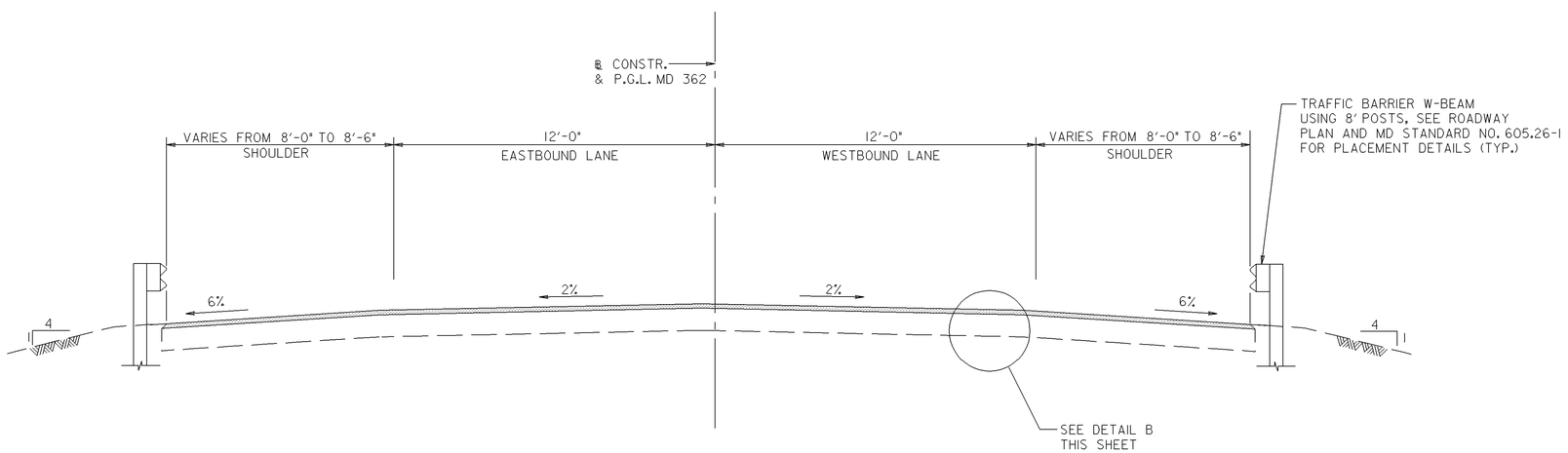

TYPICAL ROADWAY SECTION
(STA. 184+52 TO STA. 184+62)
(STA. 185+67 TO STA. 185+77)

SCALE: 3/8" = 1'-0"

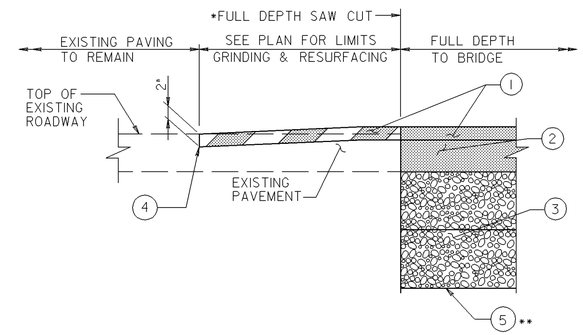

LONGITUDINAL PAVING TIE-IN DETAIL

SCALE: NONE

PAVING LEGEND:

1. 2" HOT-MIX ASPHALT SUPERPAVE 12.5 MM FOR SURFACE, PG 64-22, LEVEL 2
2. 4" HOT-MIX ASPHALT SUPERPAVE 19 MM FOR BASE, PG 64-22, LEVEL 2
3. 16" CAPPING BORROW
4. TOP OF EXISTING PAVEMENT AFTER GRINDING 2"
5. TOP OF SUBGRADE AND LIMIT OF CLASS I EXCAVATION

* SAW CUTS SHALL BE INCIDENTAL TO CLASS I EXCAVATION

** ALL ROADWAY EXCAVATION SHALL BE CLASS I

TS-1

REVISIONS

STATE OF MARYLAND
DEPARTMENT OF TRANSPORTATION
STATE HIGHWAY ADMINISTRATION
OFFICE OF BRIDGE DEVELOPMENT

PRESTRESSED CONCRETE SLAB PANEL
BRIDGE NO. 19005
ON MD 362 (MOUNT VERNON ROAD)
OVER MONIE CREEK
ROADWAY TYPICAL SECTIONS

SCALE AS SHOWN DATE OCT., 2008 CONTRACT SO4215180

DESIGNED BY W.N.P.
DRAWN BY GLYNIS, W.N.P.
CHECKED BY JCN
E.S.F.
10-14-08

SHEET NO. 3 OF 50

OTHER CONTRACTS FOR THIS STRUCTURE

STRUCTURE INVENTORY NO. 1900500

SURVEY BOOK NO. 31496

S:\CADD\OBD\1900500\003_19005rts.dgn
PRINT DATE: Tuesday, October 06, 2009 at 7:35:34 AM

INDEXED

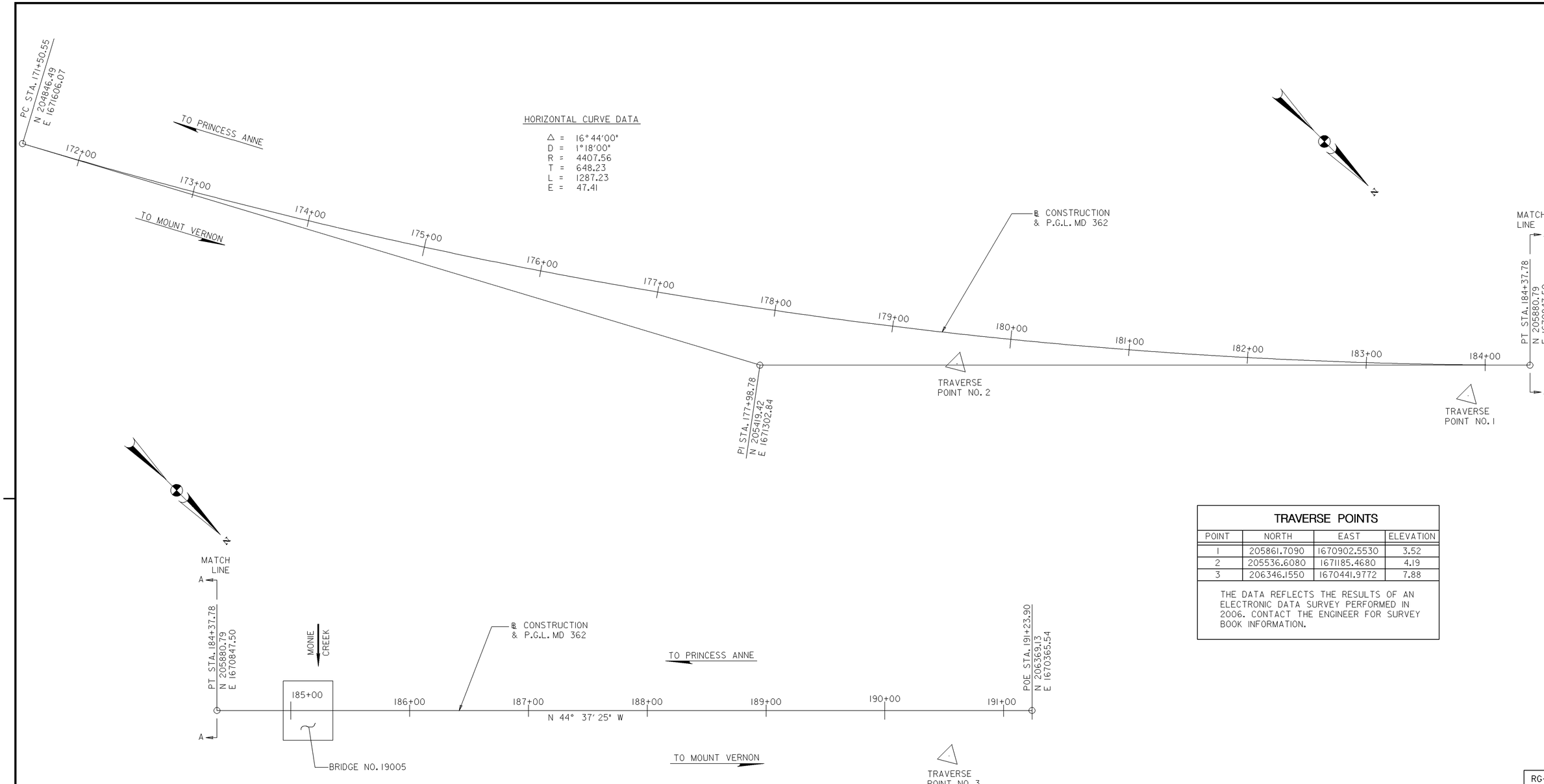

HORIZONTAL CURVE DATA

Δ = 16° 44'00"
D = 1° 18'00"
R = 4407.56
T = 648.23
L = 1287.23
E = 47.41

GEOMETRIC LAYOUT – PLAN

SCALE: 1" = 40'-0"

TRAVERSE POINTS

POINT	NORTH	EAST	ELEVATION
1	205861.7090	1670902.5530	3.52
2	205536.6080	1671185.4680	4.19
3	206346.1550	1670441.9772	7.88

THE DATA REFLECTS THE RESULTS OF AN ELECTRONIC DATA SURVEY PERFORMED IN 2006. CONTACT THE ENGINEER FOR SURVEY BOOK INFORMATION.

RG-1

REVISIONS

STATE OF MARYLAND
DEPARTMENT OF TRANSPORTATION
STATE HIGHWAY ADMINISTRATION
OFFICE OF BRIDGE DEVELOPMENT

PRESTRESSED CONCRETE SLAB PANEL
BRIDGE NO. 19005
ON MD 362 (MOUNT VERNON ROAD)
OVER MONIE CREEK
ROADWAY GEOMETRIC PLAN

SCALE AS SHOWN DATE OCT., 2008 CONTRACT SO4215180

DESIGNED BY W.N.P.
DRAWN BY W.N.P.
CHECKED BY JCN
E.S.F.
10-14-08

SHEET NO. 4 OF 50

OTHER CONTRACTS FOR THIS STRUCTURE

STRUCTURE INVENTORY NO. 1900500

SURVEY BOOK NO. 31496

S:\CADD\OBD\1900500\004_19005RGP.DGN
PRINT DATE: Tuesday, October 06, 2009 at 7:36:19 AM

INDEXED

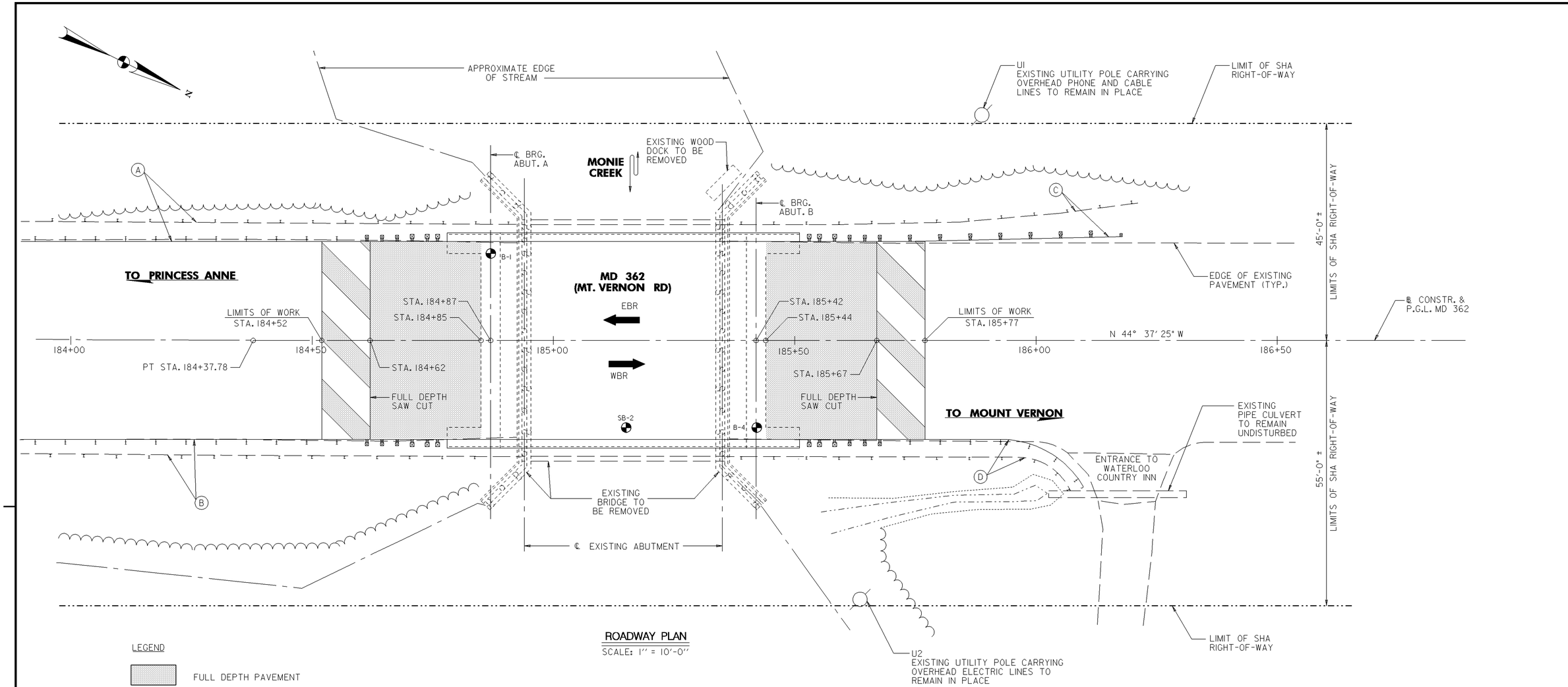

ROADWAY PLAN

SCALE: 1″ = 10′-0″

LEGEND

FULL DEPTH PAVEMENT

GRINDING AND RESURFACING

UTILITIES

UTILITY	DESCRIPTION	DISPOSITION
UI	AERIAL PHONE AND CABLE	TO REMAIN IN PLACE.
U2	AERIAL ELECTRIC	TO REMAIN IN PLACE.

TRAFFIC BARRIER SCHEDULE

LOCATION	(A)	(B)	(C)	(D)
*REMOVE AND DISPOSE EXISTING W-BEAM TRAFFIC BARRIER	110 ± LF	100 ± LF	62 ± LF	75 ± LF
PLACE THRIE BEAM ANCHORAGE (STD. NO. MD 605.41)	1 EA	1 EA	1 EA	1 EA
**PLACE TYPE C END TREATMENT (STD. NO. MD 605.03)	1 EA	1 EA	1 EA	
**PLACE TRAFFIC BARRIER W BEAM USING 8′-0″ POST (STD. NO. MD 605.25)	90′-0″	90′-0″	70′-0″	88′-0″
PLACE TYPE K END TREATMENT (STD. NO. MD 605.10-01)				1 EA

* LIMIT OF REMOVAL SHALL BEGIN AT END OF EXISTING CONCRETE BRIDGE PARAPET.

** PLACE W-BEAM BARRIER MOUNTED MARKERS AT 40′ INTERVALS.

ROADWAY PLAN NOTES:

1. ALL SAW CUTS SHALL BE INCIDENTAL TO CLASS 1 EXCAVATION.
2. ALL ROADWAY EXCAVATION SHALL BE CLASS 1.
3. TRAFFIC WILL BE DETOURED DURING CONSTRUCTION. SEE DETOUR PLANS FOR ADDITIONAL DETAILS.
4. SEE EROSION AND SEDIMENT CONTROL SHEETS FOR LIMITS OF DISTURBANCE. CONTRACTOR MAY CLEAR WITHIN LIMITS OF DISTURBANCE IN ACCORDANCE WITH ALL APPLICABLE PERMIT REQUIREMENTS AS SPECIFIED IN THE CONTRACT DOCUMENTS.
5. ALL WORK TO OCCUR WITHIN SHA RIGHT-OF-WAY.
6. ACCESS TO ENTRANCE OF WATERLOO COUNTRY INN MUST BE MAINTAINED AT ALL TIMES DURING CONSTRUCTION. PLACEMENT OF BARRIERS AND CONSTRUCTION EQUIPMENT MUST NOT RESTRICT ACCESS TO THE ENTRANCE.

NOTES:

FOR EROSION AND SEDIMENT CONTROL DETAILS, SEE SHEET NOS. ES-1 AND ES-2.
FOR DETOUR PLAN AND DETAILS, SEE SHEET NOS. D-1 THRU D-4.
FOR SIGNING AND PAVEMENT MARKING PLAN, SEE SHEET NO. FM-1.

RP-1

REVISIONS

STATE OF MARYLAND
DEPARTMENT OF TRANSPORTATION
STATE HIGHWAY ADMINISTRATION
OFFICE OF BRIDGE DEVELOPMENT

PRESTRESSED CONCRETE SLAB PANEL
BRIDGE NO. 19005
ON MD 362 (MOUNT VERNON ROAD)
OVER MONIE CREEK
ROADWAY PLAN DETAILS

SCALE AS SHOWN DATE OCT., 2008 CONTRACT SO4215180

DESIGNED BY W.N.P.
DRAWN BY GLYNIS, W.N.P.
CHECKED BY JCN
E.S.F.
10-14-08

SHEET NO. 5 OF 50

OTHER CONTRACTS FOR THIS STRUCTURE

STRUCTURE INVENTORY NO. 1900500

SURVEY BOOK NO. 31496

S:\CADD\OBD\1900500\005_19005rpd.dgn
PRINT DATE: Tuesday, October 06, 2009 at 7:36:48 AM

INDEXED

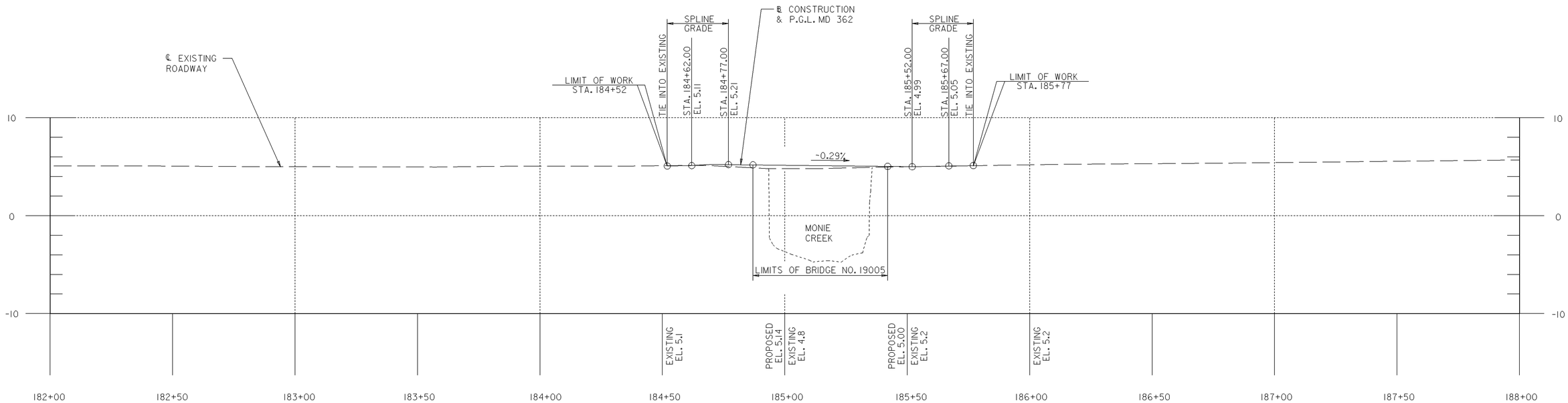

VERTICAL PROFILE – ELEVATION

SCALE: HOR. 1"= 20'-0"
VER. 1"= 5'-0"

RG-2

REVISIONS	STATE OF MARYLAND DEPARTMENT OF TRANSPORTATION STATE HIGHWAY ADMINISTRATION OFFICE OF BRIDGE DEVELOPMENT PRESTRESSED CONCRETE SLAB PANEL BRIDGE NO. 19005 ON MD 362 (MOUNT VERNON ROAD) OVER MONIE CREEK ROADWAY PROFILE
	SCALE AS SHOWN DATE OCT., 2008 CONTRACT SO4215180
	DESIGNED BY W.N.P. DRAWN BY CHECKED BY JCN E.S.F. 10-14-08
	SHEET NO. 6 OF 50

OTHER CONTRACTS FOR THIS STRUCTURE _____ _____

STRUCTURE INVENTORY NO. 1900500

SURVEY BOOK NO. 31496

S:\CADD\OBD\1900500\006_19005rpro.dgn
PRINT DATE: Tuesday, October 06, 2009 at 7:37:29 AM

INDEXED

EROSION AND SEDIMENT CONTROL - GENERAL NOTES

1. MDE NOTIFICATION

IF AN EROSION AND SEDIMENT CONTROL PERMIT IS ISSUED FOR THIS PROJECT, THE CONTRACTOR, UPON APPROVAL FROM SHA, MUST NOTIFY MDE IN WRITING AND/OR BY TELEPHONE AT (410) 537-3510 AT THE FOLLOWING POINTS:

- PRE-CONSTRUCTION MEETING
- EROSION AND SEDIMENT CONTROL MEETING (MINIMUM 7 WORKING DAYS PRIOR TO COMMENCING EARTH DISTURBING ACTIVITIES)
- FOLLOWING INSTALLATION OF INITIAL SEDIMENT CONTROL MEASURES
- DURING INSTALLATION OF MAJOR SEDIMENT CONTROL BASINS/TRAPS
- PRIOR TO REMOVAL OR MODIFICATION OF ANY SEDIMENT CONTROL STRUCTURE(S)
- PRIOR TO REMOVAL OF ALL SEDIMENT CONTROL DEVICES
- PRIOR TO FINAL ACCEPTANCE BY SHA

2. STANDARDS AND SPECIFICATIONS

THIS PLAN IS DESIGNED AND SHALL BE CONSTRUCTED IN ACCORDANCE WITH THE 1994 MARYLAND STANDARDS AND SPECIFICATIONS FOR SOIL EROSION AND SEDIMENT CONTROL. THE 2000 MARYLAND STORMWATER DESIGN MANUAL, VOLUMES I & II AND THE MARYLAND DEPARTMENT OF ENVIRONMENT EROSION AND SEDIMENT CONTROL AND STORMWATER MANAGEMENT REGULATIONS, AND ALL REVISIONS THEREOF. AND AS SPECIFIED IN THE CONTRACT DOCUMENTS. THE CONTRACTOR SHALL KEEP A COPY OF THE 1994 "MARYLAND STANDARDS AN SPECIFICATIONS FOR SOIL EROSION AND SEDIMENT CONTROL" ON THE SITE AT ALL TIMES.

3. INGRESS/EGRESS CONTROLS

THE CONTRACTOR SHALL PROTECT ALL POINTS OF CONSTRUCTION INGRESS AND EGRESS TO PREVENT THE DEPOSITION OF MATERIALS ON PUBLIC ROADS. ALL MATERIALS DEPOSITED ON PUBLIC ROADS SHALL BE MECHANICALLY REMOVED IMMEDIATELY. THE FLUSHING OF ROAD SURFACES IS PROHIBITED.

TYPICALLY, ALL INGRESS AND EGRESS POINTS SHALL BE CONTROLLED THROUGH THE USE OF A "STABILIZED CONSTRUCTION ENTRANCE."

4. INSPECTION

THE CONTRACTOR SHALL INSPECT DAILY AND MAINTAIN CONTINUOUSLY IN AN EFFECTIVE OPERATING CONDITION ALL EROSION AND SEDIMENT CONTROL MEASURES.

5. SHUTDOWNS AND /OR PENALTIES

TOTAL COMPLIANCE WITH THE APPROVED EROSION AND SEDIMENT CONTROL PLAN IS EXPECTED AT ALL TIMES. IN CASES WHERE THE CONTRACTOR IS FOUND TO BE IN NON-COMPLIANCE SHA MAY TAKE STEPS TO IMPOSE SELECTED OR TOTAL SHUTDOWNS AND IMPOSE PER DAY PENALTIES FOR NON-COMPLIANCE.

THE DISTRICT ENGINEER CAN IMPOSE A TOTAL OR PARTIAL SHUTDOWN IF THE PROJECT MAY ADVERSELY IMPACT THE WATERS OF THE STATE.

6. RECORD KEEPING

THE PROJECTS' APPROVAL LETTER, APPROVED EROSION AND SEDIMENT CONTROL PLANS, APPROVED CHANGE REQUESTS, DAILY LOG BOOKS AND TEST REPORTS WILL BE AVAILABLE AT THE SITE FOR INSPECTION BY DULY AUTHORIZED OFFICIALS OF MDE.

7. EROSION AND SEDIMENT CONTROL EXCAVATION

SILT REMOVED FROM CONTROL DEVICES SHALL BE PLACED IN AN APPROVED WASTE SITE EITHER ON OR OFF THE PROJECT. MATERIAL STORED ON SITE MAY BE REUSED ONCE IT IS DRIED AND IF IT MEETS SHA REQUIREMENTS FOR EMBANKMENT OR ANY UNSPECIFIED NEED.

8. OFF-SITE UTILITY WORK

SEDIMENT CONTROL FOR UTILITY CONSTRUCTION IN AREAS OUTSIDE OF DESIGNED CONTROLS SHALL FOLLOW THESE ADDITIONAL BEST MANAGEMENT PRACTICES:

(a) CALL "MISS UTILITY" AT 1-800-257-7777 48 HOURS PRIOR TO THE START OF WORK

(b) EXCAVATED MATERIAL SHALL BE PLACED ON THE HIGH SIDE OF THE TRENCH.

(c) TRENCHES FOR UTILITY INSTALLATIONS SHALL BE BACKFILLED, COMPACTED AND STABILIZED AT THE END OF EACH WORKING DAY. WHEN THIS IS NOT POSSIBLE, THE AREA SHALL CONFORM TO (d).

(d) TEMPORARY SILT FENCES SHALL BE PLACED IMMEDIATELY DOWNSTREAM OF ANY DISTURBED AREA INTENDED TO REMAIN DISTURBED FOR MORE THAN ONE DAY.

9. SENSITIVE AREAS

NO CONSTRUCTION ACTIVITIES SHALL BE UNDERTAKEN WITHIN SPECIFIED SENSITIVE AREAS OF THE PROJECT WITHOUT PRIOR NOTIFICATION OF THE ENGINEER. ALL WORK IN THESE AREAS SHALL BE MONITORED BY A RESPONSIBLE PARTY DESIGNATED BY THE CONTRACTOR TO ASSURE THAT REASONABLE CARE IS TAKEN IN OR ADJACENT TO THESE AREAS. AREAS CONSIDERED SENSITIVE ARE DEFINED AS: FLOODPLAINS, WETLANDS (TIDAL, NONTIDAL AND ASSOCIATED BUFFERS) CRITICAL AREAS, FORESTED AREAS, ARCHEOLOGICAL SITES, HISTORIC SITES, PARKLAND AND OPEN WATER.

10. STANDARD STABILIZATION NOTE

FOLLOWING INITIAL SOIL DISTURBANCE OR REDISTURBANCE, PERMANENT OR TEMPORARY STABILIZATION SHALL BE COMPLETED WITHIN SEVEN (7) CALENDAR DAYS AS TO THE SURFACE OF ALL PERIMETER CONTROLS, DIKES, SWALES, DITCHES, PERIMETER SLOPES, AND ALL SLOPES GREATER THAN 3 HORIZONTAL TO 1 VERICAL (3:1); AND FOURTEEN DAYS (14) AS TO ALL OTHER DISTURBED OR GRADED AREAS ON THE PROJECT SITE.

11. SITE INFORMATION • (NOT FOR BIDDING PURPOSES)

TOTAL AREA OF SITE	0.25	ACRES
AREA DISTURBED	0.13	ACRES
AREA TO BE ROOFED OR PAVED	0.00	ACRES
TOTAL CUT	100	CU. YDS.
TOTAL FILL	100	CU. YDS.
OFFSITE WASTE/BORROW AREA LOCATION (TO BE DETERMINED)		

12. INCREMENTAL STABILIZATION

REFER TO THE CURRENT MARYLAND STANDARDS AND SPECIFICATIONS FOR SOIL EROSION AND SEDIMENT CONTROL FOR THE INCREMENTAL STABILIZATION OF CUTS AND FILLS.

13. DEWATERING PRACTICES

THE CONTRACTOR IS ALERTED THAT MDE CONSIDERS DEWATERING PRACTICES TO BE ELECTIVE IN NATURE. DEWATERING PRACTICES ARE TO BE LOCATED AND OPERATED IN A MANNER THAT DOES NOT DISCHARGE SEDIMENT INTO ANY WATERWAY. NO VISIBLE CHANGES TO STREAM CLARITY ARE PERMITTED.

14. MODIFICATIONS

THE CONTRACTOR SHALL SUBMIT MODIFICATIONS TO THE EROSION AND SEDIMENT CONTROLS TO SHA FOR APPROVAL PRIOR TO SUBMISSION TO MDE. NO MODIFICATIONS SHALL BE IMPLEMENTED UNTIL ALL APPROVALS FROM SHA AND MDE ARE OBTAINED.

STANDARD SYMBOLS

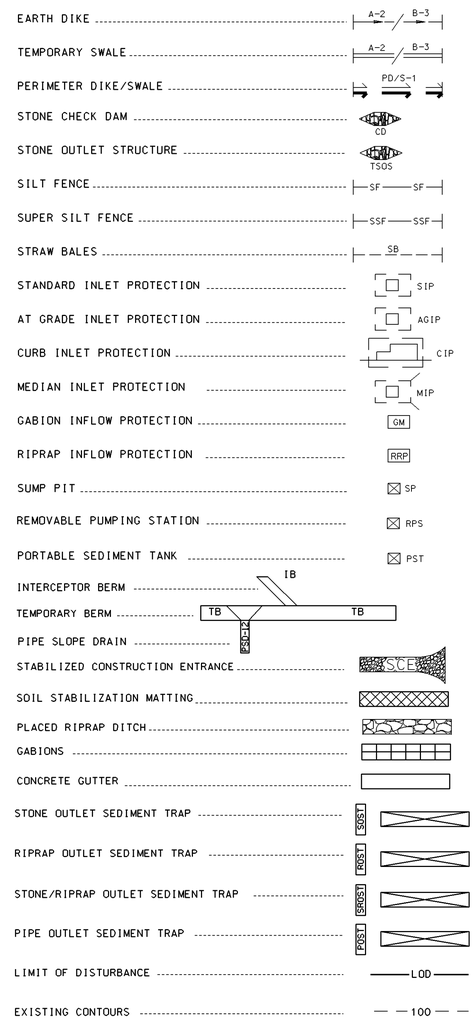

SEQUENCE OF CONSTRUCTION

1. NOTIFY THE MARYLAND DEPARTMENT OF THE ENVIRONMENT (MDE) AS PER NOTE NO. 1 ON EROSION AND SEDIMENT CONTROL GENERAL NOTES ON THIS SHEET.
2. INSTALL TRAFFIC CONTROL DEVICES AS SHOWN ON STANDARD MD-104.06.03 FOR THE INSTALLATION OF PILES.
3. EXCAVATE EXISTING PAVEMENT, AUGER HOLES, AND INSTALL PILES AS SHOWN ON SHEET S-4. ALL EXCAVATION EXCEPT AUGURED HOLES SHALL BE CONTAINED WITHIN THE LIMITS OF EXISTING PAVEMENT. STABILIZE ALL DISTURBED AREAS BY THE END OF EACH WORK DAY.
4. AFTER PILE INSTALLATION, COVER ALL DISTURBED AREAS WITH HMA AND STABILIZE ALL DISTURBED AREAS BY THE END OF EACH WORK DAY. ALL SOIL EXCAVATED FROM AUGURED HOLES SHALL BE REMOVED FROM THE SITE. ON SITE STORAGE OF THIS MATERIAL IS PROHIBITED. NO DISTURBED AREAS SHALL BE LEFT UNSTABILIZED OVERNIGHT, UNLESS THE RUNOFF IS DIRECTED TO AN MDE APPROVED SEDIMENT CONTROL DEVICE.

* 5. INSTALL TRAFFIC CONTROL DEVICES AS SHOWN ON SHEET NOS. D-1 THRU D-4.

6. CLEAR AND GRUB ONLY THE AREAS NEEDED FOR THE INSTALLATION OF THE THE EROSION AND SEDIMENT (E&S) CONTROL DEVICES.
7. ALL EROSION AND SEDIMENT CONTROLS SHALL BE PLACED AS INDICATED. NO DEVIATIONS FROM THIS PLAN MAY TAKE PLACE WITHOUT THE PRIOR WRITTEN APPROVAL OF STATE HIGHWAY ADMINISTRATION AND THE APPROPRIATE AGENCIES.
8. WITH THE APPROVAL OF THE SEDIMENT CONTROL INSPECTOR, COMMENCE GENERAL CONSTRUCTION. NO DISTURBED AREA SHALL BE LEFT UNSTABILIZED OVER NIGHT, UNLESS THE RUNOFF IS DIRECTED TO AN MDE APPROVED SEDIMENT CONTROL DEVICE.
9. THE CONTRACTOR SHALL ONLY EXCAVATE AREAS OF FULL DEPTH PAVEMENT THAT CAN BE STABILIZED WITH BASE COURSE BY THE END OF ONE WORK DAY. THE AREA DIRECTLY BEHIND THE ABUTMENTS REQUIRED TO RECONSTRUCT THE BRIDGE IS EXCLUDED FROM THIS REQUIREMENT.
10. THE CONTRACTOR SHALL ONLY REMOVE THE EXISTING TREES AND BRUSH WITHIN THE LIMITS OF DISTURBANCE REQUIRED FOR THE BRIDGE WORK. ALL OTHER TREES AND VEGETATION SHALL REMAIN UNDISTURBED.
11. COMMENCE BRIDGE WORK. DEWATER ABUTMENT WITH PUMP AND PORTABLE SEDIMENT TANK AS SHOWN ON SHEET ES-2. DEWATERING SHALL TAKE PLACE BEHIND EXISTING ABUTMENTS.
12. WITH A TURBIDITY CURTAIN IN PLACE, REMOVE THE EXISTING TIMBER ABUTMENT TO THE TOP OF THE SHEET PILE CAP.
13. UPON COMPLETION OF ALL CONSTRUCTION ACTIVITIES, PERMANENTLY STABILIZE ALL DISTURBED AREAS. ALL DISTURBED AREAS SHALL BE GRADED TO THEIR FINAL CONTOURS AND SHALL BE STABILIZED BY SEEDING AND MULCHING.
14. ONCE ALL DISTURBED AREAS ARE STABILIZED AND CONSTRUCTION IS COMPLETE, AND WITH THE APPROVAL OF THE MDE, THE SEDIMENT AND ERSION CONTROL DEVICES SHALL BE REMOVED AND ANY DISTURBED AREAS SHALL BE RE-STABILIZED.

* CONTRACTOR MAY INSTALL TRAFFIC CONTROL DEVICES AT ANY POINT BETWEEN ITEM NO. 5 AND 10, COMMENCE BRIDGE WORK.

WETLAND NOTES

1. THE CONTRACTOR SHALL MAKE EVERY EFFORT TO MINIMIZE DISTURBANCES TO WETLANDS WITHIN THE LIMITS OF DISTURBANCE.
2. THE CONTRACTOR SHALL PLACE EQUIPMENT ON TIMBER MATS WHEN WORKING IN WETLANDS. TIMBER MATING SHALL BE INCIDENTAL TO THE "CLEARING AND GRUBBING" ITEM.
3. THE CONTRACTOR SHALL RESTORE ALL WETLANDS TO PRE-CONSTRUCTION CONDITIONS TO THE SATISFACTION OF THE ENGINEER. THIS SHALL INCLUDE VEGETATION AND GRADE ELEVATIONS. ALL RESTORATION WORK SHALL BE INCIDENTAL TO "TURF ESTABLISHMENT" ITEM.

STREAM RESTRICTION NOTES

THERE SHALL BE NO IN-STREAM CONSTRUCTION PERMITTED DURING THE PERIOD OF MARCH 1, THROUGH JUNE 15, INCLUSIVE, DURING ANY YEAR.

ES-1

REVISIONS

STATE OF MARYLAND
DEPARTMENT OF TRANSPORTATION
STATE HIGHWAY ADMINISTRATION
OFFICE OF BRIDGE DEVELOPMENT

PRESTRESSED CONCRETE SLAB PANEL
BRIDGE NO. 19005
ON MD 362 (MOUNT VERNON ROAD)
OVER MONIE CREEK
EROSION AND SEDIMENT CONTROL DETAILS

SCALE AS SHOWN DATE OCT., 2008 CONTRACT SO4215180

DESIGNED BY W.N.P.
DRAWN BY SHA
CHECKED BY JCN

E.S.F.
10-14-08

SHEET NO. 7 OF 50

OTHER CONTRACTS FOR THIS STRUCTURE

STRUCTURE INVENTORY NO. 1900500

SURVEY BOOK NO. 31496

S:\CADD\OBD\1900500\007_19005ESCDET.dgn
PRINT DATE: Tuesday, October 06, 2009 at 7:37:59 AM

INDEXED

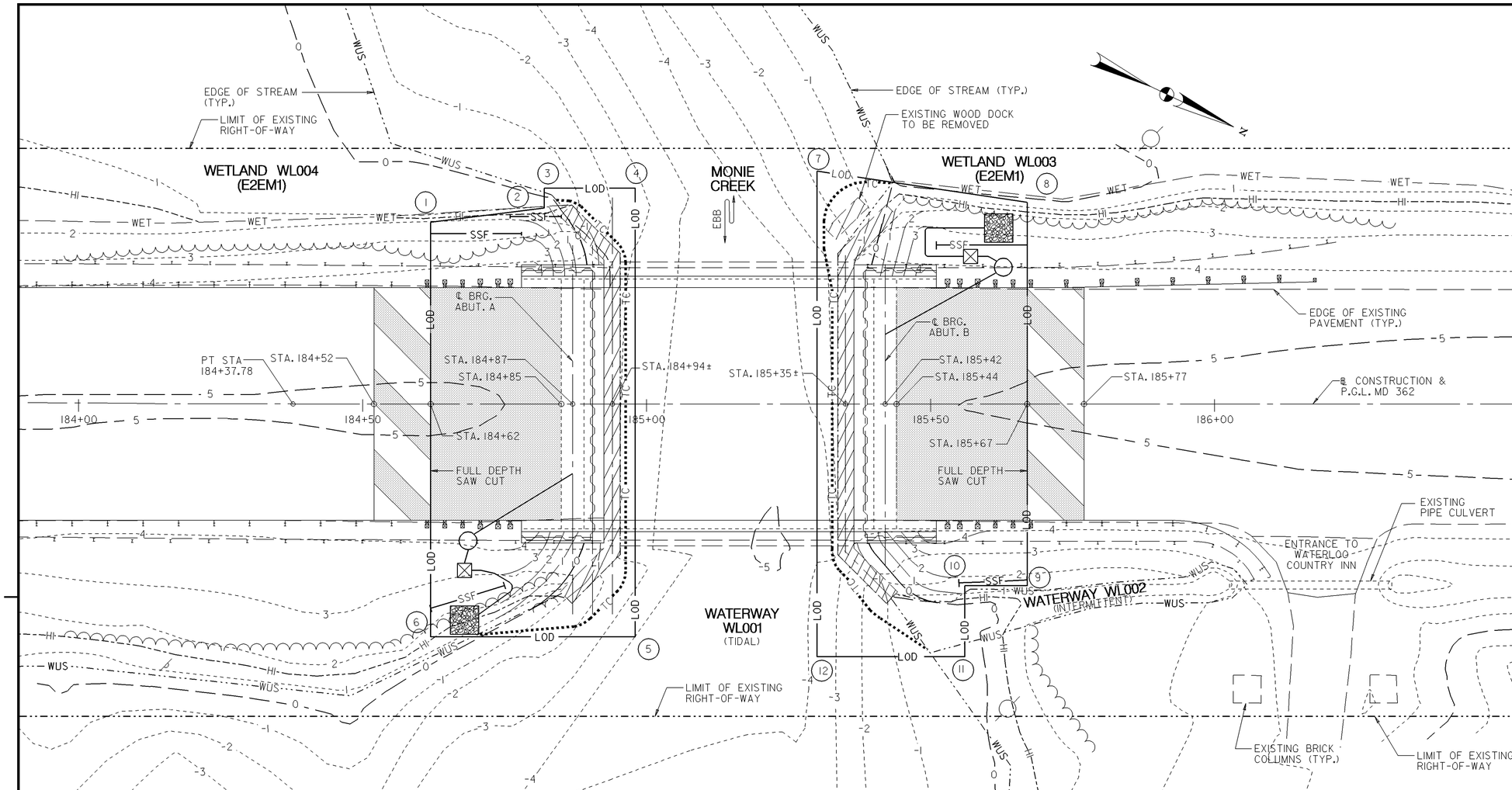

EROSION AND SEDIMENT CONTROL PLAN

SCALE: 1" = 10'-0"

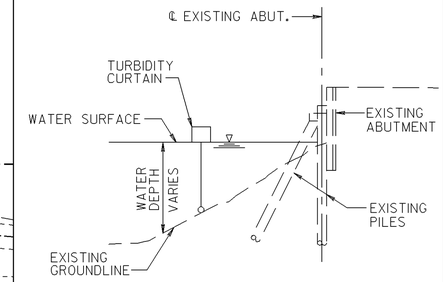

TURBIDITY CURTAIN DETAIL – ELEVATION

SCALE: 1/8" = 1'-0"

NOTE:

FOR UTILITY DETAILS, SEE SHEET NO. RP-1.

LEGEND:

- DENOTES FULL DEPTH PAVEMENT
- DENOTES GRIND AND RESURFACE
- LOD — INDICATES LIMIT OF DISTURBANCE
- SSF — INDICATES SUPER SILT FENCE
- WET — INDICATES WETLAND BOUNDRY
- HI — INDICATES MEAN HIGH WATER MARK
- WUS — INDICATES WATERS OF THE U.S. & MEAN LOW WATER MARK
- LIMIT OF RIGHT-OF-WAY
- 5 — INDICATES PROPOSED CONTOURS
- 5 — INDICATES EXISTING CONTOURS
- TC — INDICATES TURBIDITY CURTAIN
- PORTABLE SEDIMENT TANK
- DEWATERING PUMP
- DEWATERING PIPES
- TEMPORARY 5'x5'x19" CLASS I RIPRAP PROTECTION
- DENOTES REMOVAL OF EXISTING ABUTMENTS TO THE TOP OF THE SHEET PILING CONCRETE CAP, AFTER PROPOSED ABUTMENTS ARE CONSTRUCTED, SEE SHEET S-5 OR S-14 FOR LIMITS.

ES-2

LIMITS OF DISTURBANCE (LOD)

LOCATION	STATION	OFFSET	LOCATION	STATION	OFFSET
1	184+62	32' LT	7	185+30	40' LT
2	184+82	34.5' LT	8	185+67	35.5' LT
3	184+82	38' LT	9	185+67	32' RT
4	184+98	38' LT	10	185+56	32' RT
5	184+98	41' RT	11	185+56	44.5' RT
6	184+62	41' RT	12	185+30	44.5' RT

SUPER SILT FENCE (SSF) – ABUTMENT A

START STA.	OFFSET	END STA.	OFFSET	LENGTH
184+62	30' LT	184+78	30' LT	16'
184+76	33' LT	184+85	33' LT	9'
184+62	36' RT	184+75	32' RT	14'

SUPER SILT FENCE (SSF) – ABUTMENT B

START STA.	OFFSET	END STA.	OFFSET	LENGTH
185+51	28' LT	185+67	28' LT	16'
185+55	31.5' RT	185+67	31' RT	12'

NOTES:

1. THE ENTIRE PLAN VIEW SHOWN (INCLUDING THE ENTIRE LIMIT OF DISTURBANCE) IS WITHIN THE 100' CRITICAL AREA BUFFER.
2. NO DISTURBED AREA SHALL BE LEFT UNSTABILIZED OVERNIGHT UNLESS THE RUNOFF IS DIRECTED TO AN APPROVED SEDIMENT CONTROL DEVICE.

EROSION AND SEDIMENT CONTROL PLAN NOTES:

1. THE PRICE FOR THE "CLEARING AND GRUBBING" ITEM SHALL INCLUDE ALL COSTS RELATED TO SELECTIVE TRIMMING, THINNING AND FELLING OF TREES TO COMPLETE THE WORK REQUIRED.
2. INSTALL PROTECTIVE SHIELDING IN ACCORDANCE WITH SECTION 405 TO PROTECT DEBRIS AND POLLUTANTS FROM ENTERING THE STREAM DURING REMOVAL OF PORTIONS OF THE EXISTING BRIDGE. ALSO, DEBRIS AND POLLUTANTS SHALL BE PREVENTED FROM ENTERING THE STREAM CHANNEL FOR THE DURATION OF THE CONTRACT.

REVISIONS

STATE OF MARYLAND
DEPARTMENT OF TRANSPORTATION
STATE HIGHWAY ADMINISTRATION
OFFICE OF BRIDGE DEVELOPMENT

PRESTRESSED CONCRETE SLAB PANEL
BRIDGE NO. 19005
ON MD 362 (MOUNT VERNON ROAD)
OVER MONIE CREEK
EROSION AND SEDIMENT CONTROL PLAN

SCALE AS SHOWN DATE OCT., 2008 CONTRACT SO4215180

DESIGNED BY W.N.P.
DRAWN BY GLYNIS, W.N.P.
CHECKED BY JCN
E.S.F.
10-14-08

SHEET NO. 8 OF 50

OTHER CONTRACTS FOR THIS STRUCTURE

STRUCTURE INVENTORY NO. 1900500

SURVEY BOOK NO. 31496

S:\CADD\OBD\1900500\008_19005ESCP.dgn
PRINT DATE: Tuesday, October 06, 2009 at 7:38:35 AM

INDEXED

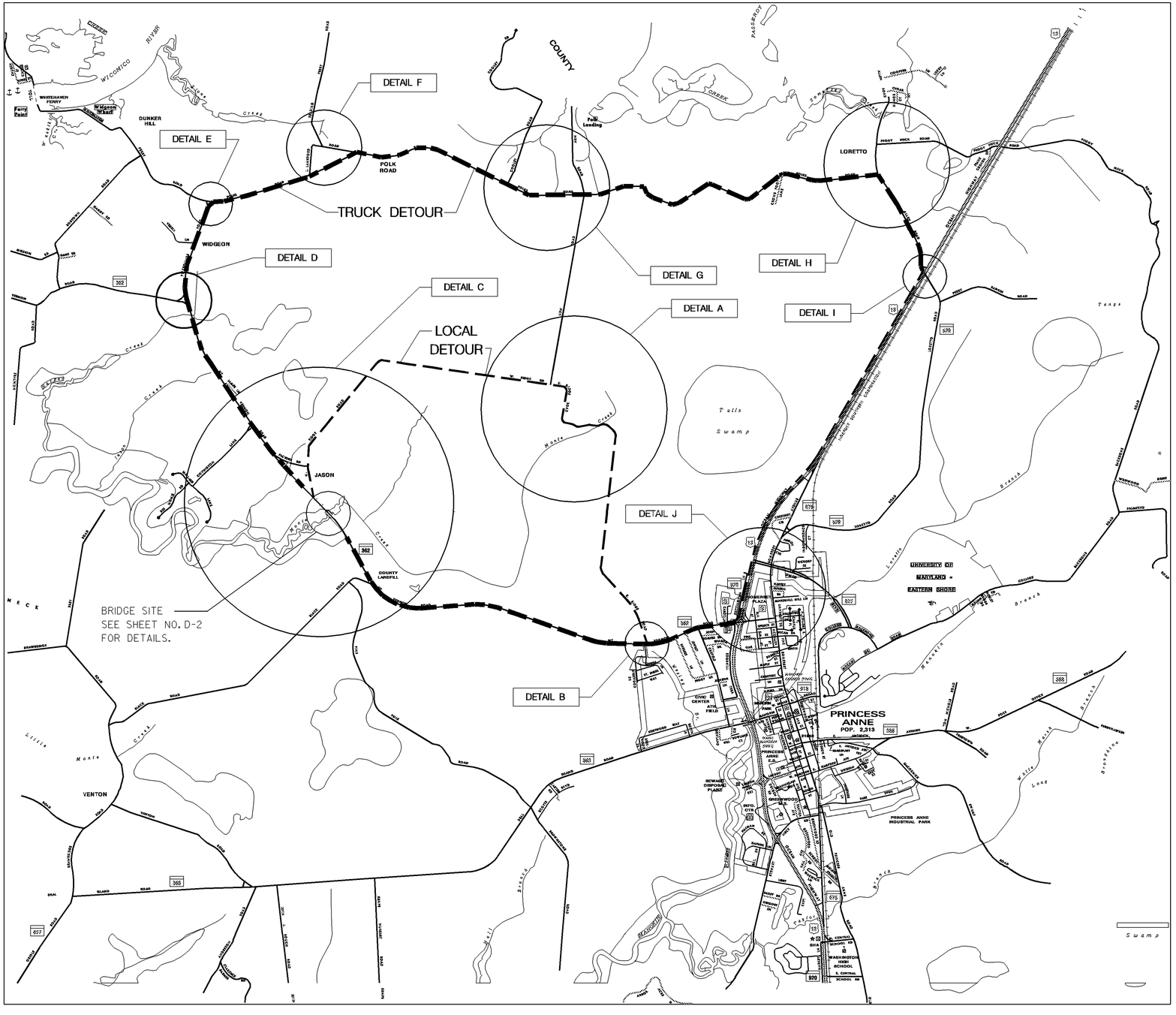

DETOUR PLAN

SCALE: 1" = 2000'

DETOUR GENERAL NOTES:

1. PRIOR TO PLACING SIGNS IN THE FIELD, THE CONTRACTOR SHALL MEET WITH THE ENGINEER AND DETERMINE THE EXACT LOCATION FOR SIGN PLACEMENT.
2. ALL SIGNS WILL BE SUPPLIED AND PLACED BY THE CONTRACTOR AT THE DIRECTION OF THE ENGINEER.
3. ALL SIGNING AND TRAFFIC CONTROL DEVICES SHALL CONFORM TO THE LATEST REQUIREMENTS OF NCHRP REPORT 350.
4. TEMPORARY TRAFFIC CONTROL SIGNS SHALL BE FLUORESCENT ORANGE, HIGH PERFORMANCE WIDE ANGLE SHEETING.
5. ADVANCE DETOUR ARROW SIGNS SHOULD BE PLACED 200 TO 800 FEET IN ADVANCE OF A TURN. DETOUR SIGNS WITH STRAIGHT OR TURN ARROWS SHOULD BE PLACED 0 TO 50 FEET IN ADVANCE OF THE TURN OR INTERSECTION.

NOTE:

TEMPORARY LANE CLOSURES WILL BE REQUIRED, DURING PILE DRIVING. SEE STANDARD MD 104.06-03 FOR TEMPORARY TRAFFIC CONTROL DETAILS. ALL TRAFFIC CONTROL DEVICES FOR TEMPORARY LANE CLOSURES, INCLUDING SIGNS, BARRIERS, CRASH CUSHIONS, CHANNELIZING DEVICES, FLAGGERS, ETC. SHALL BE INCIDENTAL TO THE "MAINTENANCE OF TRAFFIC" ITEM.

LEGEND

- - - - - - DENOTES LOCAL DETOUR ROUTE

═══ DENOTES TRUCK DETOUR ROUTE

NOTES:

FOR ADDITIONAL DETOUR DETAILS, SEE SHEET NOS. D-2 AND D-3.
FOR SIGNING LEGEND, SEE SHEET D-4.
FOR BRIDGE SITE DETAILS, SEE SHEET NO. D-2.

D-1

REVISIONS

STATE OF MARYLAND
DEPARTMENT OF TRANSPORTATION
STATE HIGHWAY ADMINISTRATION
OFFICE OF BRIDGE DEVELOPMENT

PRESTRESSED CONCRETE SLAB PANEL
BRIDGE NO. 19005
ON MD 362 (MOUNT VERNON ROAD)
OVER MONIE CREEK
DETOUR PLAN

SCALE	AS SHOWN	DATE	OCT., 2008	CONTRACT	SO4215180

DESIGNED BY W.N.P.
DRAWN BY GLYNIS
CHECKED BY JCN
E.S.F.
10-14-08

SHEET NO. 9 OF 50

INDEXED

OTHER CONTRACTS FOR THIS STRUCTURE _____ _____

STRUCTURE INVENTORY NO. 1900500

SURVEY BOOK NO. 31496

S:\CADD\OBD\1900500\009_19005dp.dgn
PRINT DATE: Tuesday, October 06, 2009 at 7:39:11 AM

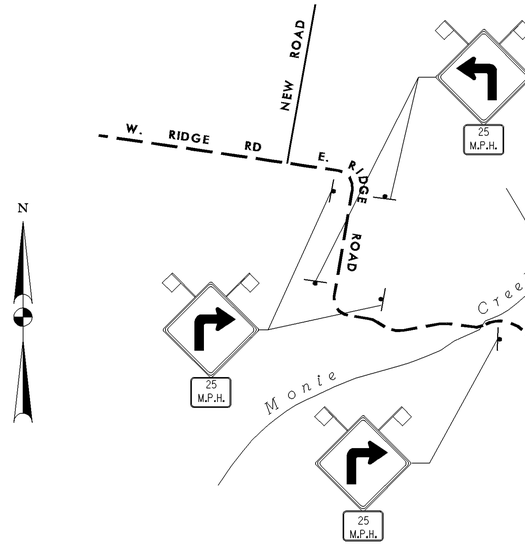

DETAIL A

SCALE: NONE

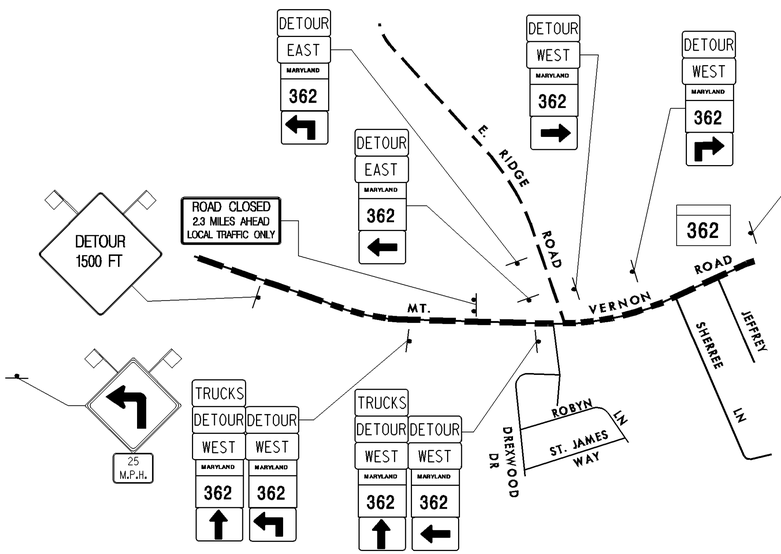

DETAIL B

SCALE: NONE

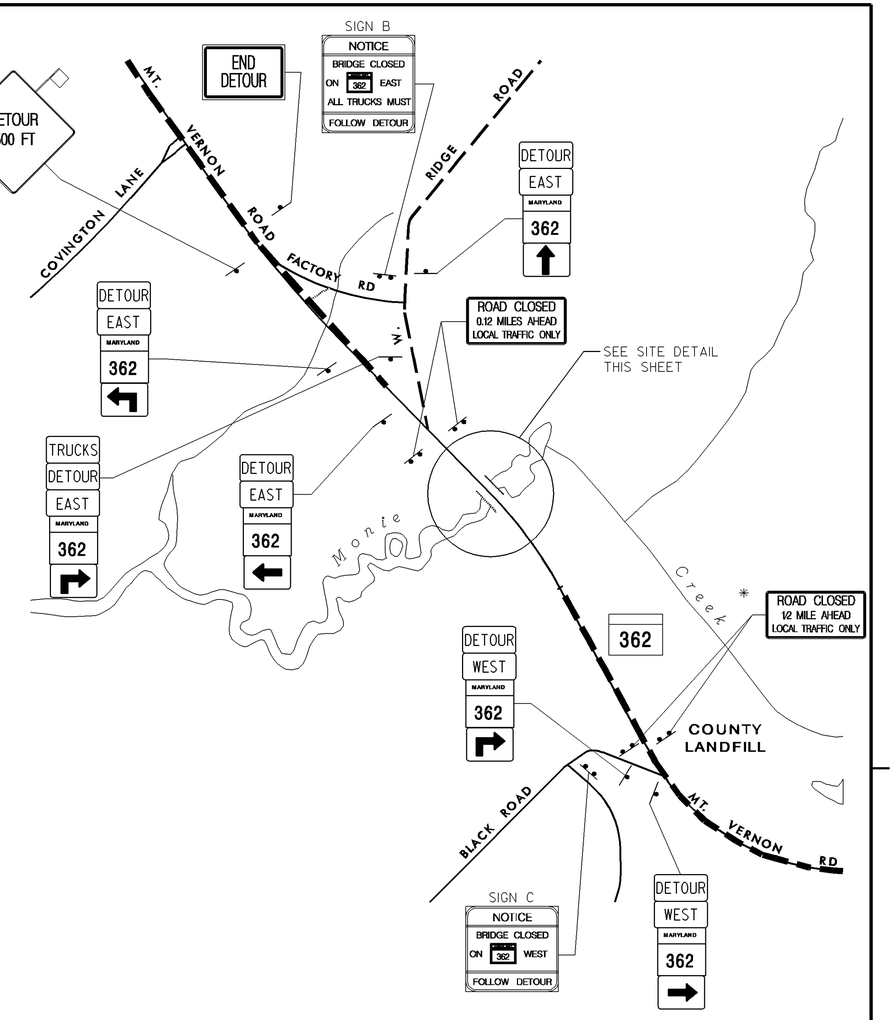

DETAIL C

SCALE: NONE

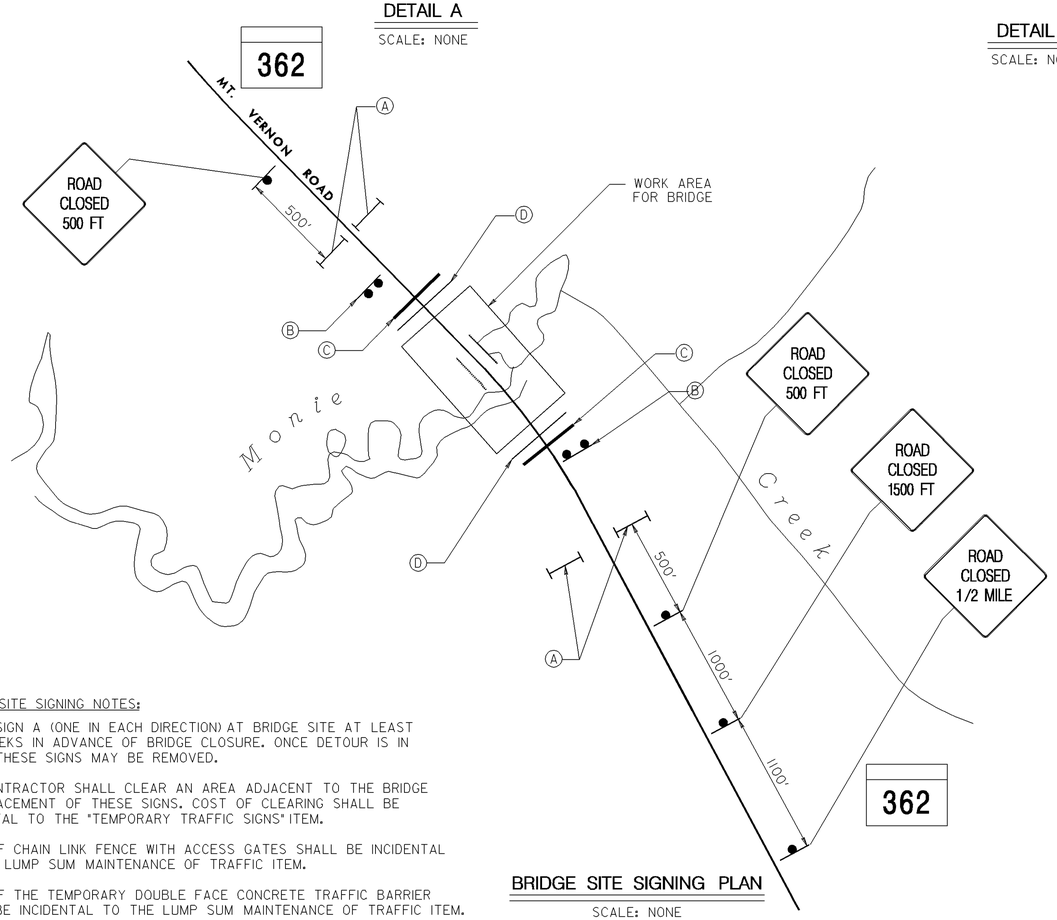

BRIDGE SITE SIGNING PLAN

SCALE: NONE

BRIDGE SITE SIGNING NOTES:

1. PLACE SIGN A (ONE IN EACH DIRECTION) AT BRIDGE SITE AT LEAST TWO WEEKS IN ADVANCE OF BRIDGE CLOSURE. ONCE DETOUR IS IN PLACE THESE SIGNS MAY BE REMOVED.
2. THE CONTRACTOR SHALL CLEAR AN AREA ADJACENT TO THE BRIDGE FOR PLACEMENT OF THESE SIGNS. COST OF CLEARING SHALL BE INCIDENTAL TO THE "TEMPORARY TRAFFIC SIGNS" ITEM.
3. COST OF CHAIN LINK FENCE WITH ACCESS GATES SHALL BE INCIDENTAL TO THE LUMP SUM MAINTENANCE OF TRAFFIC ITEM.
4. COST OF THE TEMPORARY DOUBLE FACE CONCRETE TRAFFIC BARRIER SHALL BE INCIDENTAL TO THE LUMP SUM MAINTENANCE OF TRAFFIC ITEM.

LEGEND – BRIDGE SITE SIGNING PLAN

(A) – EFFECTIVE XXX XX — ROAD CLOSED (R 11-2)

MOUNTED ON TYPE III BARRICADE WITH FLASHING LIGHTS

(B) – SIGN A MOUNTED ON 2 POSTS. SEE SHEET NO. D-4 FOR SIGN DETAILS.

(C) – TEMPORARY DOUBLE FACE CONCRETE TRAFFIC BARRIER PLACED ACROSS FULL WIDTH OF ROADWAY AND IN FRONT OF EACH CHAIN LINK FENCE LOCATION. EXACT LOCATION TO BE DETERMINED IN THE FIELD. COST TO BE INCIDENTAL TO THE "MAINTENANCE OF TRAFFIC" ITEM.

(D) – 6' CHAIN LINK FENCE PLACED ACROSS FULL WIDTH OF ROADWAY WITH ACCESS GATES. EXACT LOCATION TO BE DETERMINED BY THE ENGINEER IN THE FIELD. COST TO BE INCIDENTAL TO THE "MAINTENANCE OF TRAFFIC" ITEM.

NOTES:

FOR DETOUR PLAN, SEE SHEET NO. D-1.
FOR ADDITIONAL DETOUR DETAILS, SEE SHEET NO. D-3.
FOR SIGNING DETAILS, SEE SHEET NO. D-4.
FOR ADDITIONAL DETOUR DETAILS, SEE MD STANDARD M-104.06.01.

D-2

REVISIONS

STATE OF MARYLAND
DEPARTMENT OF TRANSPORTATION
STATE HIGHWAY ADMINISTRATION
OFFICE OF BRIDGE DEVELOPMENT

PRESTRESSED CONCRETE SLAB PANEL
BRIDGE NO. 19005
ON MD 362 (MOUNT VERNON ROAD)
OVER MONIE CREEK
DETOUR DETAILS

SCALE AS SHOWN DATE OCT., 2008 CONTRACT SO4215180

DESIGNED BY W.N.P.
DRAWN BY W.N.P., GLYNIS
CHECKED BY JCN
E.S.F.
10-14-08

SHEET NO. 10 OF 50

INDEXED

OTHER CONTRACTS FOR THIS STRUCTURE

STRUCTURE INVENTORY NO. 1900500

SURVEY BOOK NO. 31496

S:\CADD\OBD\1900500\010_19005dd1.dgn
PRINT DATE: Tuesday, October 06, 2009 at 7:42:10 AM

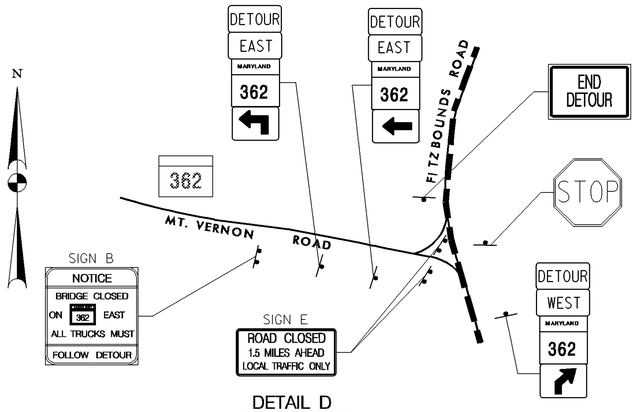

DETAIL D

SCALE: NONE

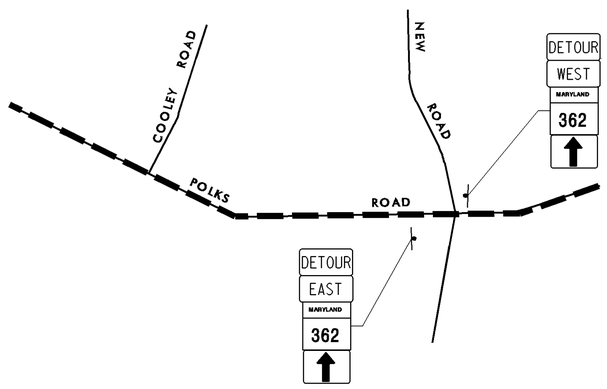

DETAIL G

SCALE: NONE

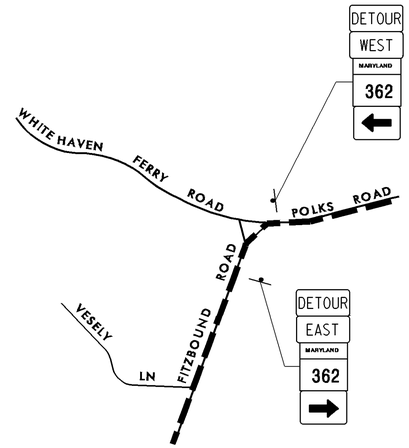

DETAIL E

SCALE: NONE

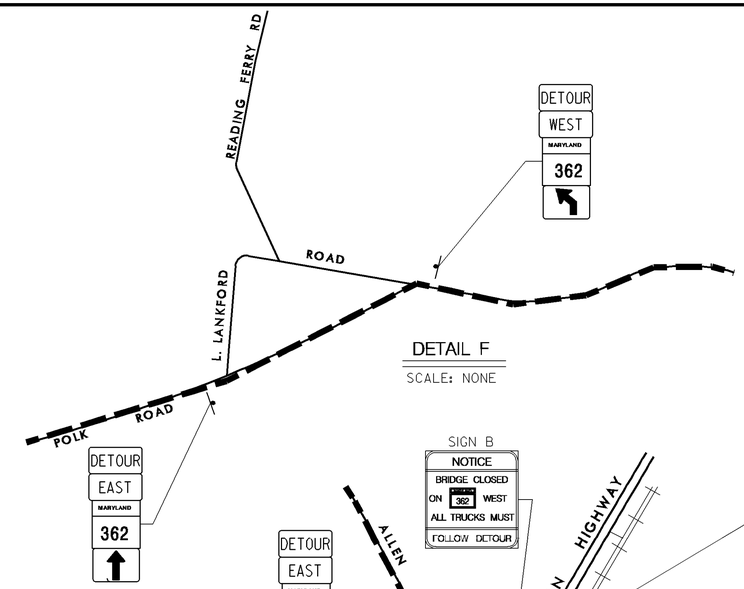

DETAIL F

SCALE: NONE

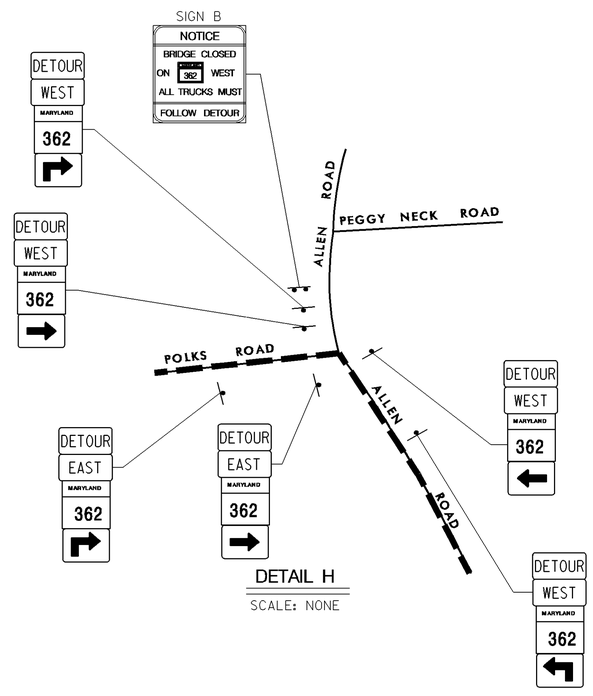

DETAIL H

SCALE: NONE

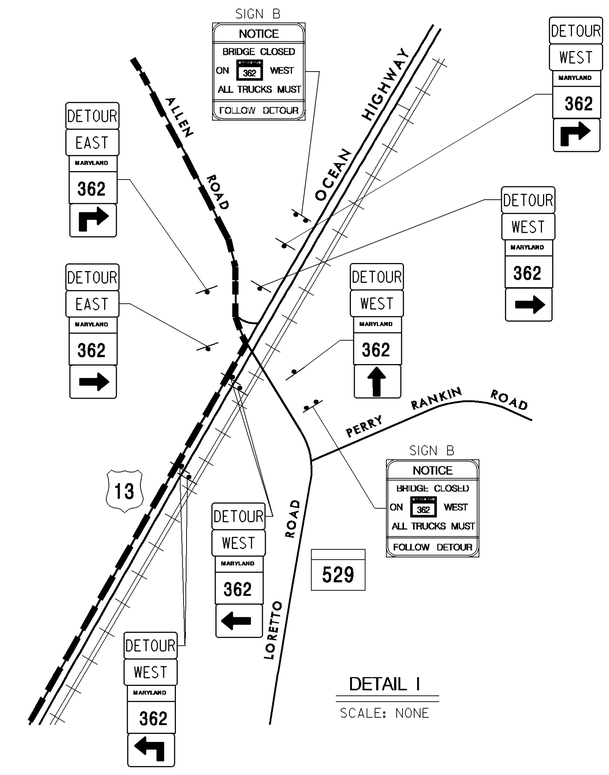

DETAIL I

SCALE: NONE

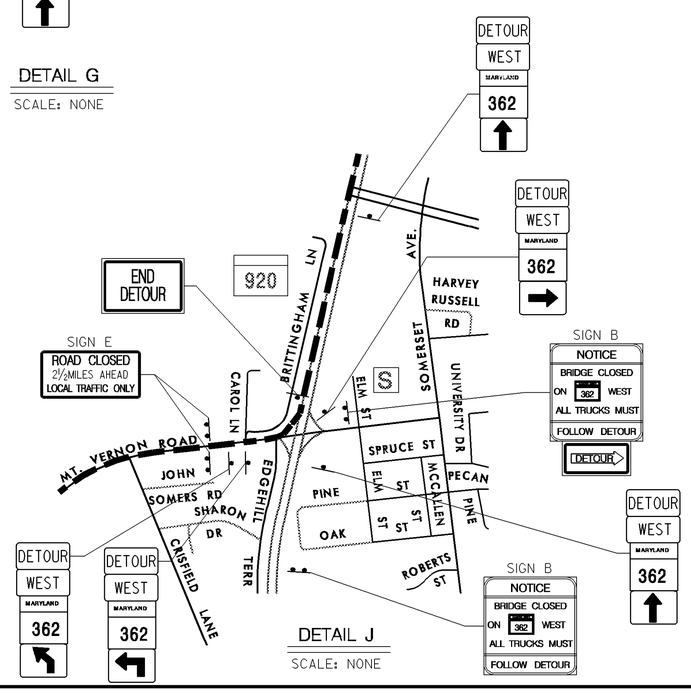

DETAIL J

SCALE: NONE

LEGEND

DENOTES DETOUR ROUTE

NOTE:

FOR ADDITIONAL DETOUR DETAILS, SEE SHEET D-1 AND D-2.
FOR SIGNING LEGEND, SEE SHEET D-4.

D-3

REVISIONS

STATE OF MARYLAND
DEPARTMENT OF TRANSPORTATION
STATE HIGHWAY ADMINISTRATION
OFFICE OF BRIDGE DEVELOPMENT

PRESTRESSED CONCRETE SLAB PANEL
BRIDGE NO. 19005
ON MD 362 (MOUNT VERNON ROAD)
OVER MONIE CREEK
DETOUR DETAILS

SCALE	AS SHOWN	DATE	OCT., 2008
CONTRACT	SO4215180		

DESIGNED BY W.N.P.
DRAWN BY W.N.P., GLYNIS
CHECKED BY JCN
E.S.F.
10-14-08

SHEET NO. 11 OF 50

OTHER CONTRACTS FOR THIS STRUCTURE

STRUCTURE INVENTORY NO. 1900500

SURVEY BOOK NO. 31496

S:\CADD\OBD\1900500\011_19005dd2.dgn
PRINT DATE: Tuesday, October 06, 2009 at 7:42:32 AM

INDEXED

SIGN A
SCALE: ¾" = 1'-0"

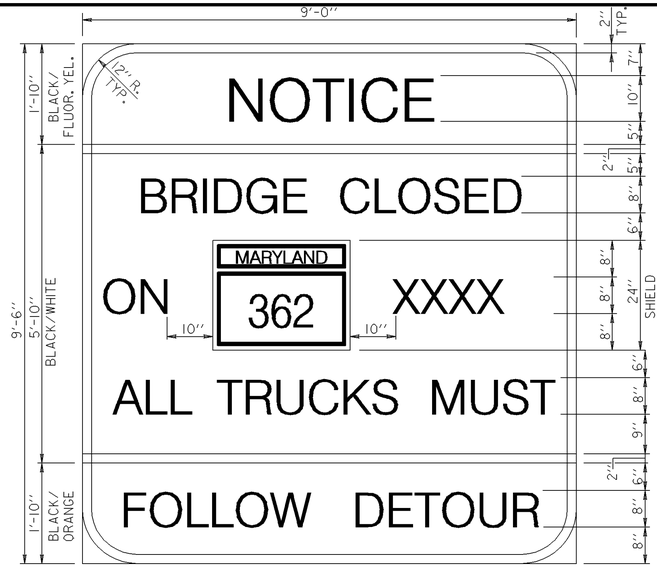

SIGN B
SCALE: ¾" = 1'-0"

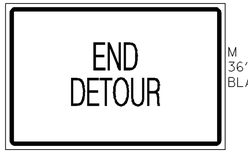

M 4-8a
36" X 24"
BLACK/ORANGE

M 1-5
24" X 24"
BLACK/WHITE

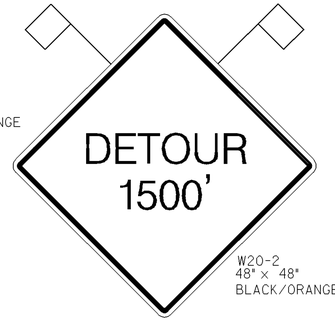

W20-2
48" x 48"
BLACK/ORANGE

W 20-3
48" X 48"
BLACK/ORANGE

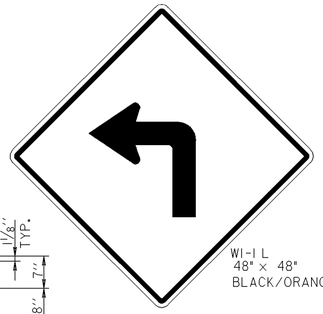

W1-1 L
48" x 48"
BLACK/ORANGE

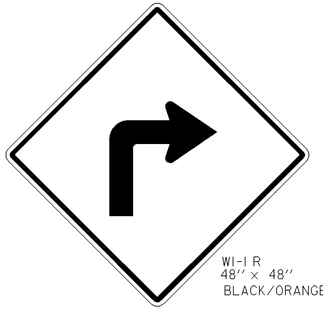

W1-1 R
48" x 48"
BLACK/ORANGE

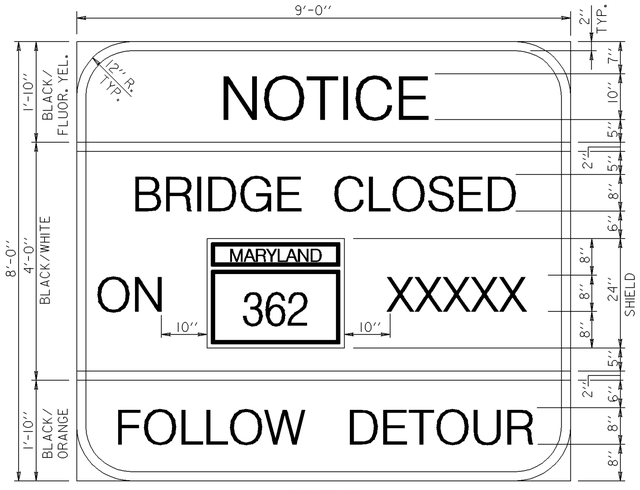

SIGN C
SCALE: ¾" = 1'-0"

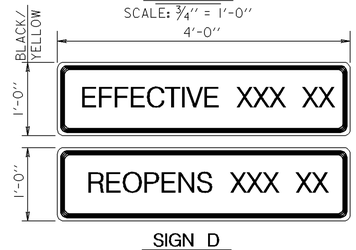

SIGN D
SCALE: 1" = 1'-0"

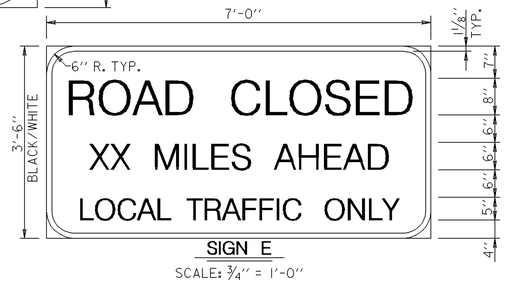

SIGN E
SCALE: ¾" = 1'-0"

SIGN D
(SEE DETAILS
THIS SHEET)

R 11-2
48" X 30"
BLACK/WHITE

R1-1
30" X 30"
RED/WHITE

W13-1
18" x 18"
BLACK/ORANGE

SIGN LEGEND
SCALE: ¾" = 1'-0"

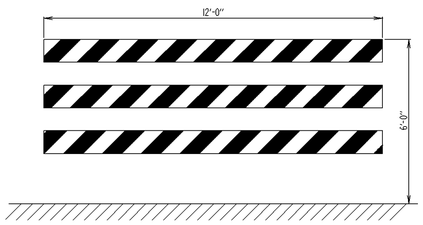

ELEVATION
Scale: ⅜" = 1'-0"

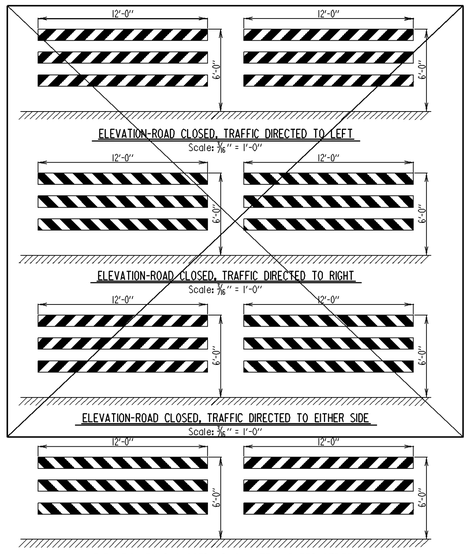

ELEVATION-ROAD CLOSED USING WHITE AND RED STRIPES
Scale: ⅜" = 1'-0"

M 5-1 L
21" X 15"
BLACK/WHITE

M 5-1 R
21" X 15"
BLACK/WHITE

M 5-2 L
21" X 15"
BLACK/WHITE

M 5-2 R
21" X 15"
BLACK/WHITE

M 6-1 L
21" X 15"
BLACK/WHITE

M 6-1 R
21" X 15"
BLACK/WHITE

M 6-3
21" X 15"
BLACK/WHITE

SIGN LEGEND
SCALE: ¾" = 1'-0"

M 4-8
24" X 12"
BLACK/ORANGE

M 4-4
24" X 12"
BLACK/ORANGE

M 3-2
24" X 12"
BLACK/WHITE

M 3-4
24" X 12"
BLACK/WHITE

Notes:

1. Type III Barricade shall conform to NCHRP Report 350 and the MUTCD except that all barricades to close structures shall be 12 ft.long by 6 ft.high.
2. Striping shall be reflectorized alternate orange and white colors. Right (R) Barricade shown. (L) barricade shall have stripes sloping in opposite direction. If barricades are to be used close road, striping shall be reflectorized alternate white and red colors.
3. Barricade shall be lighted if required by location.
4. Type III Barricades shall be selected from the Preapproved List maintained by the Office of Materials and Technology. Procedures for adding products to the prequalified list may be obtained from the Office of Materials and Technology.
5. If signing is attached to the movable barricade, the signs shall be placed so that no more than 1/3 of the reflective surface of the barricade shall be covered.

APPROVAL	STATE OF MARYLAND DEPARTMENT OF TRANSPORTATION STATE HIGHWAY ADMINISTRATION OFFICE OF BRIDGE DEVELOPMENT
L.E. Sheehan DIRECTOR OFFICE OF BRIDGE DEVEL. DATE: 8/31/79	TEMPORARY MOVABLE BARRICADE
REVISIONS: SHA 12-12-05, 1-6-06; FHWA	
FHWA APPROVAL DATE: 1-16-80; 7-24-07	STANDARD NO. M(5.08)-79-82 SHEET 1 OF 2

APPROVAL	STATE OF MARYLAND DEPARTMENT OF TRANSPORTATION STATE HIGHWAY ADMINISTRATION OFFICE OF BRIDGE DEVELOPMENT
L.E. Sheehan DIRECTOR OFFICE OF BRIDGE DEVEL. DATE: 1/6/06	TEMPORARY MOVABLE BARRICADE
REVISIONS: SHA 7-24-07; FHWA	
FHWA APPROVAL DATE:	STANDARD NO. M(5.08)-79-82 SHEET 2 OF 2

NOTE:
FOR ADDITIONAL DETOUR DETAILS, SEE MD STANDARD M-104.06.01.

D-4

REVISIONS

STATE OF MARYLAND
DEPARTMENT OF TRANSPORTATION
STATE HIGHWAY ADMINISTRATION
OFFICE OF BRIDGE DEVELOPMENT
PRESTRESSED CONCRETE SLAB PANEL
BRIDGE NO. 19005
ON MD 362 (MOUNT VERNON ROAD)
OVER MONIE CREEK
DETOUR ROADWAY SIGNS

SCALE AS SHOWN DATE OCT., 2008 CONTRACT SO4215180

DESIGNED BY W.N.P.
DRAWN BY GLYNIS
CHECKED BY JCN
E.S.F.
10-14-08

SHEET NO. 12 OF 50

INDEXED

OTHER CONTRACTS FOR THIS STRUCTURE

STRUCTURE INVENTORY NO. 1900500

SURVEY BOOK NO. 31496

S:\CADD\OBD\1900500\012_19005drs.dgn
PRINT DATE: Tuesday, October 06, 2009 at 7:45:14 AM

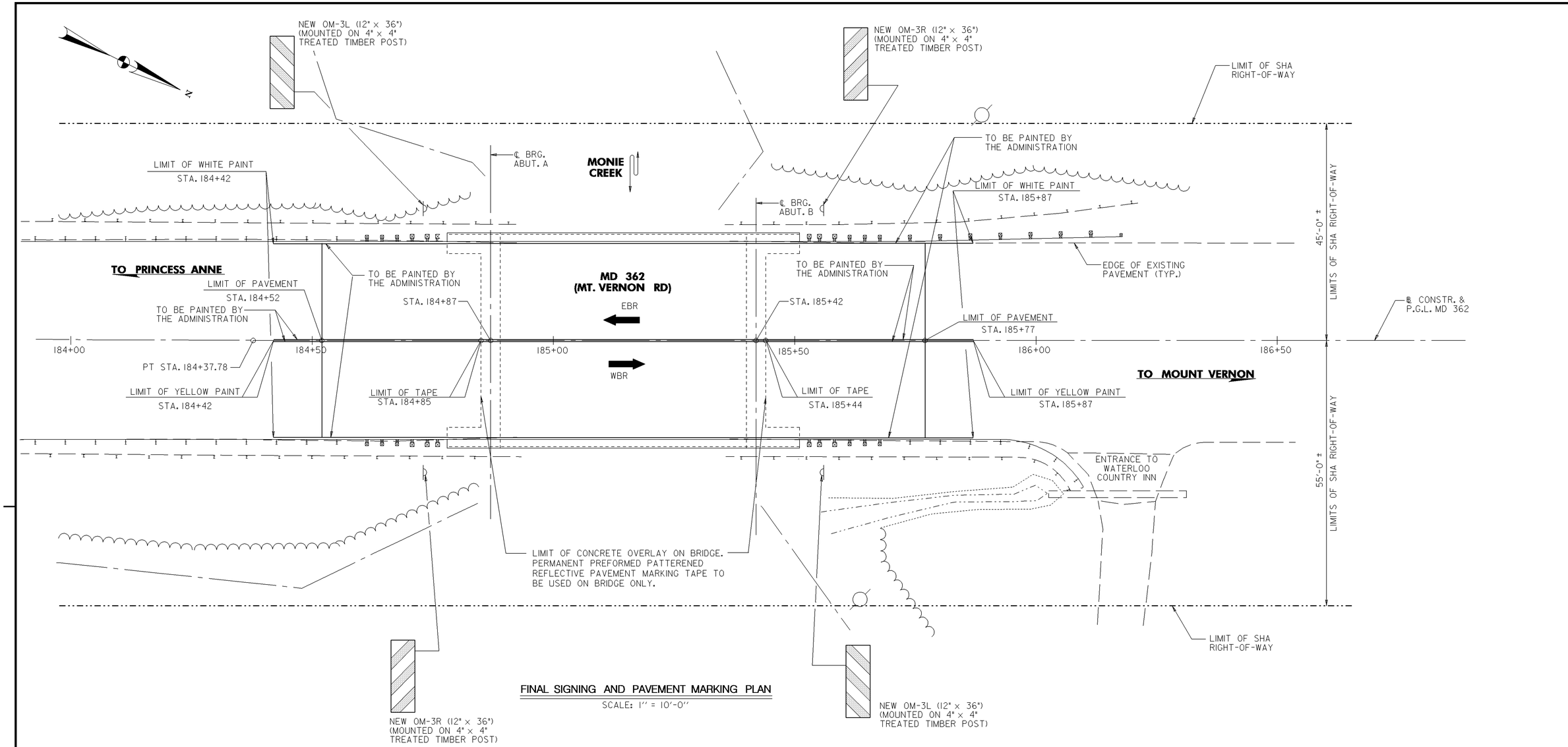

FINAL SIGNING AND PAVEMENT MARKING PLAN

SCALE: 1'' = 10'-0''

PAVEMENT MARKING SCHEDULES

PAVEMENT MARKING TYPE	LOCATION ALONG ℄ STATION	QTY
5" YELLOW PERMANENT PREFORMED PATTERNED REFLECTIVE PAVEMENT MARKING TAPE (DOUBLE LINE)	STA 184+85 TO STA. 185+44	118 LF
5" WHITE PERMANENT PREFORMED PATTERNED REFLECTIVE CONTRAST PAVEMENT MARKING TAPE (SINGLE LINE EACH SIDE)	STA 184+85 TO STA. 185+44	118 LF

NOTES:

1. FINAL LOCATION AND PLACEMENT OF PAVEMENT MARKINGS TO BE VERIFIED WITH SHA DISTRICT 1 TRAFFIC.
2. REMOVAL OF ANY EXISTING SIGNS SHALL BE INCIDENTAL TO THE "REMOVAL OF EXISTING BRIDGE" ITEM.
3. SEE ROADWAY PLAN FOR ADDITIONAL DETAILS ON PAVEMENT LIMITS.

FM-1

REVISIONS

STATE OF MARYLAND
DEPARTMENT OF TRANSPORTATION
STATE HIGHWAY ADMINISTRATION
OFFICE OF BRIDGE DEVELOPMENT

PRESTRESSED CONCRETE SLAB PANEL
BRIDGE NO. 19005
ON MD 362 (MOUNT VERNON ROAD)
OVER MONIE CREEK
FINAL SIGNING AND PAVEMENT MARKING DETAILS

SCALE AS SHOWN DATE OCT., 2008 CONTRACT SO4215180

DESIGNED BY W.N.P.
DRAWN BY W.N.P., GLYNIS
CHECKED BY JCN

E.S.F.
10-14-08

SHEET NO. 13 OF 50

OTHER CONTRACTS FOR THIS STRUCTURE

STRUCTURE INVENTORY NO. 1900500

SURVEY BOOK NO. 31496

S:\CADD\OBD\1900500\013_19005fspm.dgn
PRINT DATE: Tuesday, October 06, 2009 at 7:45:39 AM

INDEXED

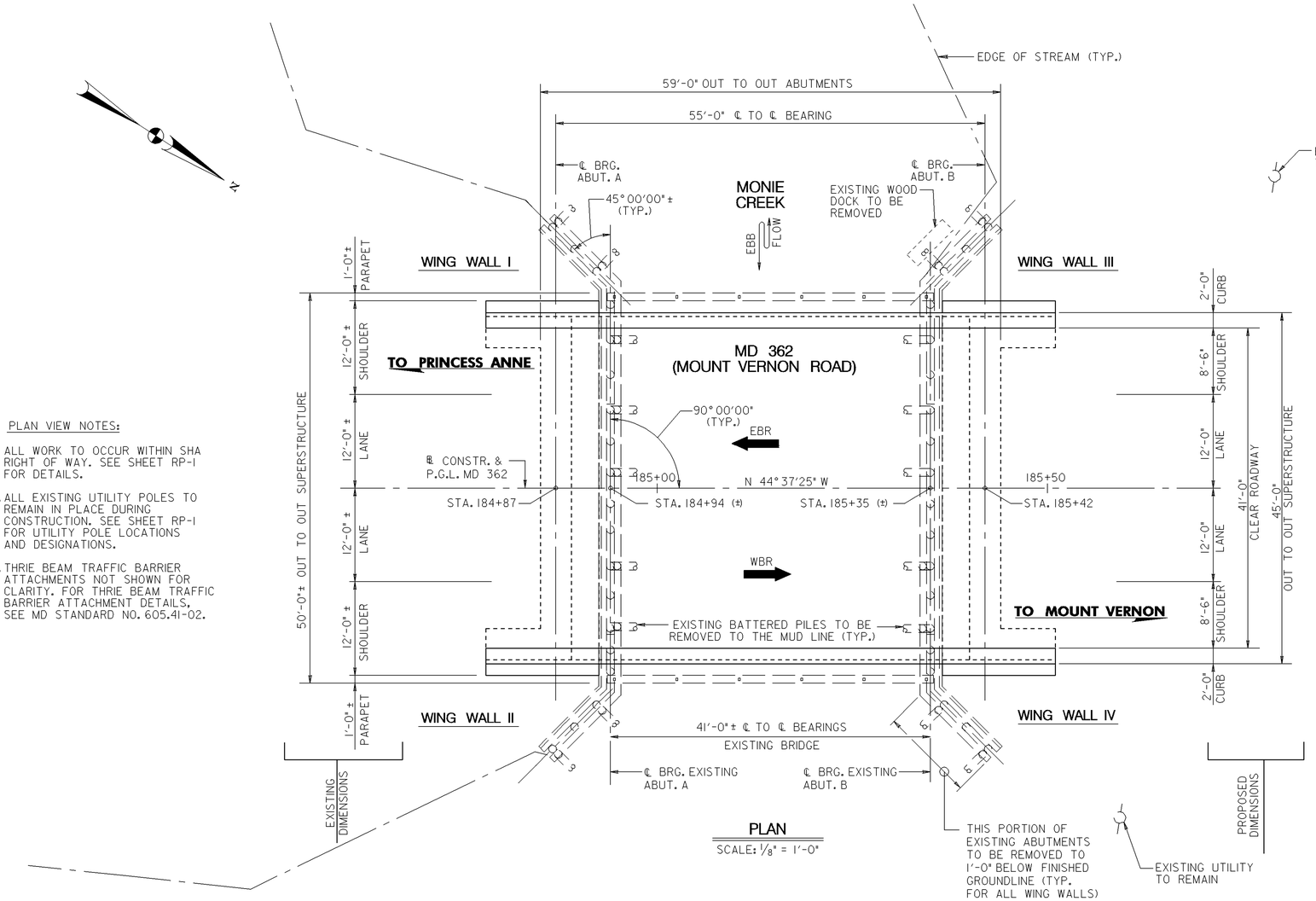

PLAN

SCALE: 1/8" = 1'-0"

PLAN VIEW NOTES:

1. ALL WORK TO OCCUR WITHIN SHA RIGHT OF WAY. SEE SHEET RP-1 FOR DETAILS.
2. ALL EXISTING UTILITY POLES TO REMAIN IN PLACE DURING CONSTRUCTION. SEE SHEET RP-1 FOR UTILITY POLE LOCATIONS AND DESIGNATIONS.
3. THRIE BEAM TRAFFIC BARRIER ATTACHMENTS NOT SHOWN FOR CLARITY. FOR THRIE BEAM TRAFFIC BARRIER ATTACHMENT DETAILS, SEE MD STANDARD NO. 605.41-02.

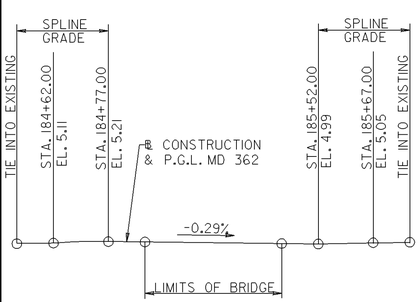

VERTICAL CURVE DATA

SCALE: NONE

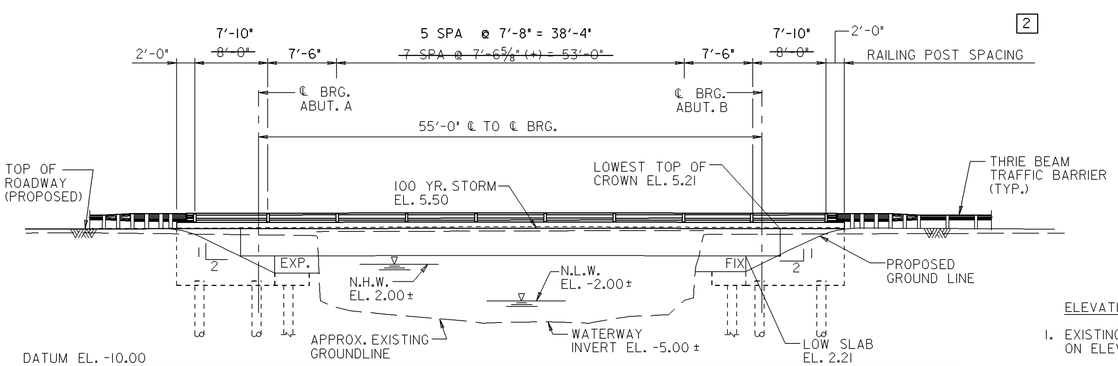

ELEVATION

SCALE: 1/8" = 1'-0"

ELEVATION VIEW NOTE:

1. EXISTING STRUCTURE NOT SHOWN ON ELEVATION FOR CLARITY.

GENERAL NOTES

SPECIFICATIONS: SHA SPECIFICATIONS DATED JANUARY, 2001 REVISIONS THEREOF AND ADDITIONS THERETO AND SPECIAL PROVISIONS FOR MATERIALS AND CONSTRUCTION

AASHTO STANDARD SPECIFICATIONS FOR HIGHWAY BRIDGES DATED 2002 FOR DESIGN.

CONCRETE DESIGN: SERVICE LOAD DESIGN METHOD fc = 1200 PSI FOR CONCRETE OTHER THAN PRESTRESSED CONCRETE.

PRESTRESSED CONCRETE DESIGN: ALLOWABLE STRESS DESIGN
REINFORCING STEEL DESIGN: fs = 24,000 PSI (NON PRETENSIONING STEEL)

LOADING: HS-25

RATINGS: RATINGS ARE BASED ON LOAD FACTOR DESIGN (LFD) UTILIZING LOADINGS NOTED ABOVE.

LFD INVENTORY	LFD OPERATING
55 TONS	93 TONS

CAST-IN-PLACE CONCRETE: CAST-IN-PLACE CURBS ON SUPERSTRUCTURE AND WING WALLS SHALL BE MIX NO. 6 (4500 PSI). SUPERSTRUCTURE OVERLAY CONCRETE SHALL BE MIX NO. 8 (4000 PSI). ALL OTHER CAST-IN-PLACE CONCRETE SHALL BE MIX NO. 3 (3500 PSI).

PRECAST CONCRETE: ALL PRECAST (NON-PRESTRESSED) CONCRETE SUBSTRUCTURE UNITS SHALL BE MIX NO. 3 (3500 PSI).

PRESTRESSED CONCRETE: THE MINIMUM COMPRESSIVE STRENGTH FOR PRESTRESSED CONCRETE AT THE AGE OF 28 DAYS SHALL BE f'c = 7,000 PSI. THE MINIMUM COMPRESSIVE STRENGTH AT THE TRANSFER OF PRESTRESS SHALL BE f'ci = 5,800 PSI. IF THE CONTRACTOR ELECTS TO POUR THE CURB WITH THE EXTERIOR BEAMS, THE CONTRACTOR MAY USE THE CONCRETE FOR THE PRESTRESSED BEAMS IN LIEU OF USING MIX. NO. 6 CONCRETE.

PRESTRESSING STEEL: PRETENSIONING STEEL STRANDS SHALL CONSIST OF 1/2" DIAMETER 7-WIRE BRIGHT LOW RELAXATION STRANDS CONFORMING TO THE REQUIREMENTS OF M 203 GRADE 270. EACH 1/2" STRAND SHALL BE PRETENSIONED TO 31,000 LB (0.75 f's), HAVE AN ULTIMATE STRENGTH OF 41,300 LB AND A YIELD STRENGTH OF 35,000 LB. CAMBER GROWTH IN PRETENSIONED SLABS, BETWEEN THE TIME OF STRESSING AND THE TIME OF SLAB PLACEMENT, IS ASSUMED TO BE 80% FOR CAMBER CALCULATIONS.

REINFORCING STEEL: REINFORCING STEEL SHALL CONFORM TO ASTM A 615, GRADE 60. ALL SPLICES, NOT SHOWN, SHALL BE LAPPED AS PER BAR LAP CHARTS. MINIMUM COVER FOR ANY BAR SHALL BE 2" UNLESS OTHERWISE NOTED, WITH THE EXCEPTION OF BARS AT THE BOTTOM AND SIDES OF ALL FOOTINGS WHICH SHALL HAVE 3" MINIMUM COVER.

FOR TIES AND STIRRUPS; STANDARD ACI BENDING TOLERANCES ARE MODIFIED TO PLUS (+) ZERO INCHES, MINUS (-) NORMAL ACI BENDING TOLERANCES.

ONLY GRADE 60 CAN BE USED ON THIS PROJECT.

REINFORCING STEEL IN THE FOLLOWING AREAS SHALL BE EPOXY COATED:

-ENTIRE CAST IN PLACE SUPERSTRUCTURE (INCLUDING OVERLAY)
-ENTIRE PRECAST SLABS, EXCEPT PRESTRESSING STEEL
-CURB PORTION OF WING WALLS

STEEL SHEET PILE: ENTIRE SHEET PILE CAP STEEL SHEET PILE SHALL CONFORM TO ASTM A 572, GRADE 50, COATED ON BOTH SIDES, BEFORE DRIVING, WITH COAL-TAR EPOXY.

KEYS: ALL KEYS ARE NOMINAL SIZE.

HYDROLOGICAL & HYDRAULIC DATA: FOR HYDROLOGICAL AND HYDRAULIC DATA, SEE SHEET S-2.

EXISTING STRUCTURE: EXISTING STRUCTURE SHOWN IN LONG DASHED LINES. ENTIRE EXISTING SUPERSTRUCTURE AND ABUTMENTS TO BE REMOVED TO TOP OF SHEET PILE CONCRETE CAP. WING WALLS SHALL BE REMOVED TO 1'-0" BELOW FINISHED GROUNDLINE. SEE SHEET S-5 OR S-14 FOR ADDITIONAL DETAILS.

S-1

REVISIONS
2 RED LINE NO. 2 MODIFIED RAIL POST SPACINGS. GLYNIS

STATE OF MARYLAND
DEPARTMENT OF TRANSPORTATION
STATE HIGHWAY ADMINISTRATION
OFFICE OF BRIDGE DEVELOPMENT

PRESTRESSED CONCRETE SLAB PANEL
BRIDGE NO. 19005
ON MD 362 (MOUNT VERNON ROAD)
OVER MONIE CREEK
GENERAL PLAN AND ELEVATION

SCALE AS SHOWN DATE OCT., 2008 CONTRACT SO4215180

DESIGNED BY W.N.P.
DRAWN BY GLYNIS
CHECKED BY JCN
E.S.F. 10-14-08

SHEET NO. 14 OF 50

OTHER CONTRACTS FOR THIS STRUCTURE

STRUCTURE INVENTORY NO. 1900500
SURVEY BOOK NO. 31496

S:\CADD\OBD\1900500\014_19005GPE.dgn
PRINT DATE: Tuesday, October 06, 2009 at 7:49:42 AM

INDEXED

HYDROLOGIC DATA

I. SOURCE: Monie Creek
PREPARED BY: [X] SHA [ ] CONSULTANT: _____ DATE: 6-08
FILE LOCATION: _____

II. DRAINAGE AREA: ACRES 5985.51 SQUARE MILES 9.4

III. METHOD(S) OF ANALYSIS:

____ USGS GAGE DATA ANALYSIS
- GAGING STATION NO. _____
- LOCATION _____
- DRAINAGE AREA _____
- YEARS OF CONTINUOUS RECORD _____

____ USGS REGRESSION EQUATIONS
REFERENCE _____

____ SCS TR - 20 METHOD - VERSION USED (DATE) _____
- RCN (EXISTING-HOMOGENEOUS WATERSHED)[1] _____
- RCN (ULTIMATE HOMOGENEOUS WATERSHED)[1] _____
- T_C (HOMOGENEOUS WATERSHED)[1] _____

____ FEMA BASE FLOOD (100-YEAR) DISCHARGE _____ (CFS) METHOD USED BY FEMA _____
X OTHER (DESCRIBE) Fixed Region Regression Equations

HAS FLOOD ROUTING BEEN USED IN DETERMINING FLOOD DISCHARGES? YES ____ NO X
METHOD SELECTED _____

IV. COMPUTED FLOOD DISCHARGES

RETURN PERIOD (YEARS)	FLOOD DISCHARGE (CFS) BASED ON EXISTING WATERSHED DEVELOPMENT	FLOOD DISCHARGE (CFS) BASED ON ULTIMATE WATERSHED DEVELOPMENT
2	212	
10	504	
25	731	
50	952	
100	1230	
500	2120	

V. HISTORIC FLOODS

YEAR	MAGNITUDE (CFS)	HIGH WATER ELEVATION	WHERE MEASURED	SOURCE OF DATA

VI. STREAM MORPHOLOGY

STREAM TYPE N/A VALLEY TYPE N/A

STREAM BED MATERIAL:
DESCRIPTION silt\sand D16 .00082 (ft.) D50 .00082 (ft.) D84 .00082 (ft.)

BANK FULL CHARACTERISTICS:
Q _____ AREA _____ WIDTH _____ DEPTH _____
SLOPE _____ MANNINGS "n" VALUE _____ SINUOSITY _____

VII. TIDAL FLOWS

100-YEAR STORM TIDE ELEVATION (FT) EL = 5.5 MAXIMUM DISCHARGE (CFS) _____
500-YEAR STORM TIDE ELEVATION (FT) EL = 8.0 MAXIMUM DISCAHRGE (CFS) _____
SOURCE OF INFORMATION _____

DESIGN DISCHARGE _____ (CFS) RETURN PERIOD _____ YEARS TIDAL PERIOD (HRS) _____
HOW DETERMINED? (EXPLAIN) _____
WATER SURFACE-ELEVATION FOR DESIGN CONDITION (FT)
(IF TIDAL FLOW GOVERNS HYDRAULIC DESIGN) _____

VII. COMMENTS: This is a tidal crossing, however, riverine discharges are the governing flows.

HYDRAULIC DATA

I. SOURCE: Monie Creek
PREPARED BY: [X] SHA [ ] CONSULTANT: _____ DATE: June, 2008
FILE LOCATION: _____ ITEM 71 RATING[2] 6
METHOD(S) OF ANALYSIS: ABSCOUR 8, HEC-RAS, TideRout 2

II. HYDRAULIC DATA

FLOW CONDITIONS[3]	CHANNEL CROSS-SECTION	STRUCTURE WATERWAY AREA[4]	ENERGY SLOPE[4]	WATER SURFACE ELEVATION[4]	CHANNEL[5] Q	W	V	D	LEFT OVERBANK LOOKING DOWNSTREAM[5] Q	W	V	D	RIGHT OVERBANK LOOKING DOWNSTREAM[5] Q	W	V	D	DISCHARGE OVER ROAD
Q_{DESIGN} DESCRIBE 1230 cfs	APPROACH (DESCRIBE LOCATION BELOW)[8]	N/A	0.000023	5.12	760	260	0.43	6.82	159	832	0.22	1.81	310	881	0.14	2.60	N/A
	UPSTREAM AT STRUCTURE	248	0.000086	5.11	1177	74	3.99	12.63	53	1334	0.69	0.06	0	0	0	0	50
	DOWNSTREAM AT STRUCTURE	248	0.000060	4.58	1177	72	4.70[6]	15.40[7]	53	920	0.84	0.07	0	0	0	0	N/A
Q_{100} DESCRIBE 1230cfs	APPROACH (DESCRIBE LOCATION BELOW)[8]	N/A	0.000021	5.12	760	260	0.43	6.82	159	832	0.22	1.81	310	881	0.14	2.60	N/A
	UPSTREAM AT STRUCTURE	248	0.000086	5.11	1177	74	3.99	12.63	53	1334	0.69	0.06	0	0	0	0	50
	DOWNSTREAM AT STRUCTURE	248	0.000060	4.58	1177	72	4.70[6]	15.40[7]	53	920	0.84	0.07	0	0	0	0	N/A
$Q_{INCIPIENT\ OVERTOPPING}$, Q_{500} OR OTHER DISCHARGE DESCRIBE Q500 = 2120 cfs	APPROACH (DESCRIBE LOCATION BELOW)[8]	N/A	0.000046	5.52	1237	260	0.66	7.22	310	938	0.17	1.98	573	908	0.22	2.92	N/A
	UPSTREAM AT STRUCTURE	248	0.000166	5.50	1008	74	3.32	13.02	1066	1343	1.75	0.45	43	180	1.05	0.23	1150
	DOWNSTREAM AT STRUCTURE	248	0.000110	5.40	1008	72	3.90[6]	12.24[7]	1066	926	2.48	0.46	43	165	0.83	0.32	N/A

III. BRIDGE SCOUR DATA

A. SCOUR EVALUATION STUDY TITLE: MD362 over Monie Creek Scour Analysis
PREPARED BY: [X] SHA [ ] CONSULTANT: _____ DATE: July 2008
FILE LOCATION: _____ ITEM 113 RATING[2] 5

B. SCOUR ESTIMATES:

	DESIGN CONDITIONS (DESCRIBE SPECIAL CONDITIONS SUCH AS OVERTOPPING, LOW TAILWATER, INFLUENCE OF CONFLUENCES, ETC.)	FLOOD DISCHARGE RETURN PERIOD (YEARS)	FLOOD DISCHARGE MAGNITUDE (CFS)	LONG TERM DEGRADATION / AGGRADATION (FT)	CONTRACTION[9] SCOUR DEPTH (LOOKING DOWNSTREAM) (FT) LT OVERBANK	MAIN CHANNEL	RT OVERBANK	CHANNEL BED LOAD (DESCRIBE)	TYPE OF SCOUR (LIVE BED/CLEAR WATER)
DESIGN FLOOD FOR SCOUR	High tailwater due to Monie Bay	100	1230	NA	NA	7	NA	NA	Clear Water
CHECK FLOOD FOR SCOUR	High tailwater due to Monie Bay	100	1230	NA	NA	7	NA	NA	Clear Water
OTHER	High tailwater due to Monie Bay. Overtopping occurs.	500	2120	NA	NA	5	NA	NA	Clear Water

TOTAL SCOUR: ESTIMATED TOTAL SCOUR AT SUBSTRUCTURE/ CHANNEL ELEMENTS (INCLUDES LONG TERM DEGRADATION/AGGRADATION PLUS CONTRACTION SCOUR, PLUS LOCAL SCOUR)

LOCATION OF CHANNEL OR SUBSTRUCTURE ELEMENT	ELEVATION OF BOTTOM OF STREAM CHANNEL BED OR SCOUR HOLE (FT)[10] DESIGN FLOOD	CHECK FLOOD	SCOUR COUNTER MEASURES [ ] EXISTING [X] NEW
CHANNEL THALWEG	-9.00	-9.00	
ABUTMENT: East (Left)	-17.00	-17.00	Sheet piling to EL=-25
ABUTMENT: West (Right)	-17.00	-17.00	Sheet piling to EL=-25
PIER NO.			
PIER NO.			
PIER NO.			
PIER NO.			
PIER NO.			
PIER NO.			
PIER NO.			
PIER NO.			
PIER NO.			
PIER NO.			
PIER NO.			
PIER NO.			
PIER NO.			
PIER NO.			
PIER NO.			
PIER NO.			

NOTES:

BLANK SPACES INDICATE THAT DATA IS NOT AVAILABLE OR IS NOT APPLICABLE

1. PARAMETERS COMPUTED ASSUMING THE WATERSHED IS HOMOGENEOUS WITHOUT SUBDIVISIONS
2. ITEM 71 RATING AND ITEM 113 RATING; REFER TO THE OBD GUIDE FOR COMPLETING THE SI&A INPUT FORMS.
3. RECORD FLOW CONDITIONS USED IN ANALYSIS: DISCHARGE (Q), TAILWATER CONDITION AND HOW SELECTED, ETC. (FOR DEPRESSED CULVERTS, INDICATE UNDER COMMENTS THE ASSUMPTIONS MADE AS TO WHETHER SEDIMENT WILL REMAIN DURING FLOODS)
4. FOR CULVERTS, USE THESE THREE COLUMNS TO RECORD:
   - DEPTH OF FLOW AT CULVERT INLET AND OUTLET
   - WATER-SURFACE ELEVATION AT CULVERT INLET AND OUTLET
   - ENERGY SLOPE FOR CULVERT BARREL
5. SYMBOLS USED:
   Q = FLOW OR DISCHARGE (CFS)
   W = CHANNEL WIDTH OR FLOODPLAIN WIDTH (FT)
   V = FLOW VELOCITY (FPS)
   D = DEPTH OF FLOW (FT)
6. FOR CULVERTS, RECORD OUTLET VELOCITY HERE
7. FOR CULVERTS , RECORD TAILWATER DEPTH HERE
8. APPROACH SECTION SHOULD BE SELECTED AS PER GUIDANCE IN ABSCOUR USERS MANUAL
9. ENTER CONTRACTION SCOUR DEPTHS ONLY (APPROXIMATE LINE 121 IN ABSCOUR OUTPUT) - NOT ABUTMENT SCOUR
10. IF SCOUR RESISTENT BEDROCK CONTROLS SCOUR, ENTER BEDROCK ELEVATION AND NOTE THIS CONDITION UNDER COMMENTS
11. RECORD INCIPIENT OVERTOPPING DISCHARGE (Q) AND RECURRENCE INTERVAL
12. RECORD CLEARANCE BETWEEN WATER SURFACE ELEVATION AND LOW CHORD FOR DESIGN DISCHARGE
13. RECORD TOTAL FLOW AREA UNDER STRUCTURE (DOWNSTREAM END) FOR 100 & 500 YEAR FLOODS
14. FOR BRIDGES:
    ENTER TYPE, SPAN LENGTH AND MAXIMUM VERTICAL CLEARANCE
    FOR CULVERTS:
    ENTER SIZE, NUMBER OF CELLS, AND LENGTH;
    DESCRIBE ANY SPECIAL FEATURES UNDER COMMENTS
15. FOR CULVERTS, DESCRIBE TYPE OF INLET/OUTLET AND EROSION PROTECTION
16. COMPOSITE "N" VALUE OF STRUCTURE

IV. ROADWAY AND STRUCTURE DATA

ITEM	EXISTING STRUCTURE	PROPOSED STRUCTURE
NAME OF WATERWAY	Monie Creek	
DATE BUILT	1934	2008
OVERTOPPING ELEVATION	4.93	4.93
OVERTOPPING LOCATION (DESCRIBE)	Bridge in sump	Bridge in sump
INCIPIENT OVERTOPPING FLOW CONDITION ((OVERTOPPING Q < 100 YR FLOOD)[11]	Q100 = incipient	Q100 = incipient
FREEBOARD[12]	0	0
TOTAL STRUCTURE WATERWAY AREA[13]	202 sq. ft.	248 sq. ft.
STRUCTURE DESCRIPTION[14]	1 span steel beam 41 ft. CLB to CLB	1 span concrete slab 55 ft. CLB to CLB
INLET TREATMENT[15]	NA	NA
OUTLET TREATMENT[15]	NA	NA
MANNINGS "N" VALUE[16]	0.06	0.06

V. SURVEY BOOK NUMBERS X
REFERENCE DATUM FOR ELEVATIONS X

VI. FLOOD PLAIN MANAGEMENT DATA

DATE OF FLOOD INSURANCE STUDY ? COMMUNITY PANEL NO. ?

PROJECT LOCATION (CHECK BELOW):

____ BEYOND FEMA PROGRAM LIMITS (NOT IN "A" HAZARD ZONE)

X FEMA HAZARD ZONE "A"; NO BASE FLOOD ELEVATIONS ESTABLISHED

____ FEMA HAZARD ZONE "A"; BASE FLOOD ELEVATIONS ESTABLISHED

REGULATORY FLOODWAY ____ YES X NO
MAXIMUM CHANGE IN WATER SURFACE ELEVATION UPSTREAM OF BRIDGE DUE TO HIGHWAY PROJECT (MAX. BACKWATER) 0.0 FT.

LOCATION OF MAX. BACKWATER FROM UPSTREAM FACE OF BRIDGE NA FT.

DESCRIBE TYPE OF STUDY DONE TO DETERMINE CONSISTENCY WITH NFIP STANDARDS NA
DATE COMMUNITY ACKNOWLEDGEMENT FORM ISSUED: NA

IS THE PROJECT CONSISTENT WITH THE CODE OF FEDERAL REGULATIONS, PART 650 A, LOCATION AND HYDRAULIC DESIGN OF ENCROACHMENTS ON FLOOD PLAINS (23 CFR 650 A). Y/N Y

IS THE PROJECT CONSISTENT WITH THE ANNOTATED CODE OF MARYLAND (COMAR 08.05.03)? Y/N Y

VII. COMMENTS:
This crossing is tidal, as such, full detailed hydraulic analysis was not performed.
Riverine discharges governed the design, due to D.A. and small tidal basin.
Q100 is both incipient overtopping and check flood.
Due to limited area, Rip-Rap scour countermeasures will not be provided. Instead sheet piling will be driven to EL=-25 to protect the abutments and backfill.
Structure piles will be to EL = +/- -110.

S-2

REVISIONS

STATE OF MARYLAND
DEPARTMENT OF TRANSPORTATION
STATE HIGHWAY ADMINISTRATION
OFFICE OF BRIDGE DEVELOPMENT
PRESTRESSED CONCRETE SLAB PANEL
BRIDGE NO. 19005
ON MD 362 (MOUNT VERNON ROAD)
OVER MONIE CREEK
HYDROLOGIC AND HYDRAULIC DATA

SCALE AS SHOWN DATE OCT., 2008 CONTRACT S0421B21

DESIGNED BY JSM
DRAWN BY JSM
CHECKED BY JSM SRD AJK

SHEET NO. 15 OF 50

INDEXED

OTHER CONTRACTS FOR THIS STRUCTURE _____

SHEET FORMAT, ISSUED: 8-25-80, REVISED: 9-16-93

STRUCTURE INVENTORY NO.

SURVEY BOOK NO.

S:\CADD\OBD\1900500\015_19005HH.dgn
PRINT DATE: Tuesday, October 06, 2009 at 7:51:21 AM

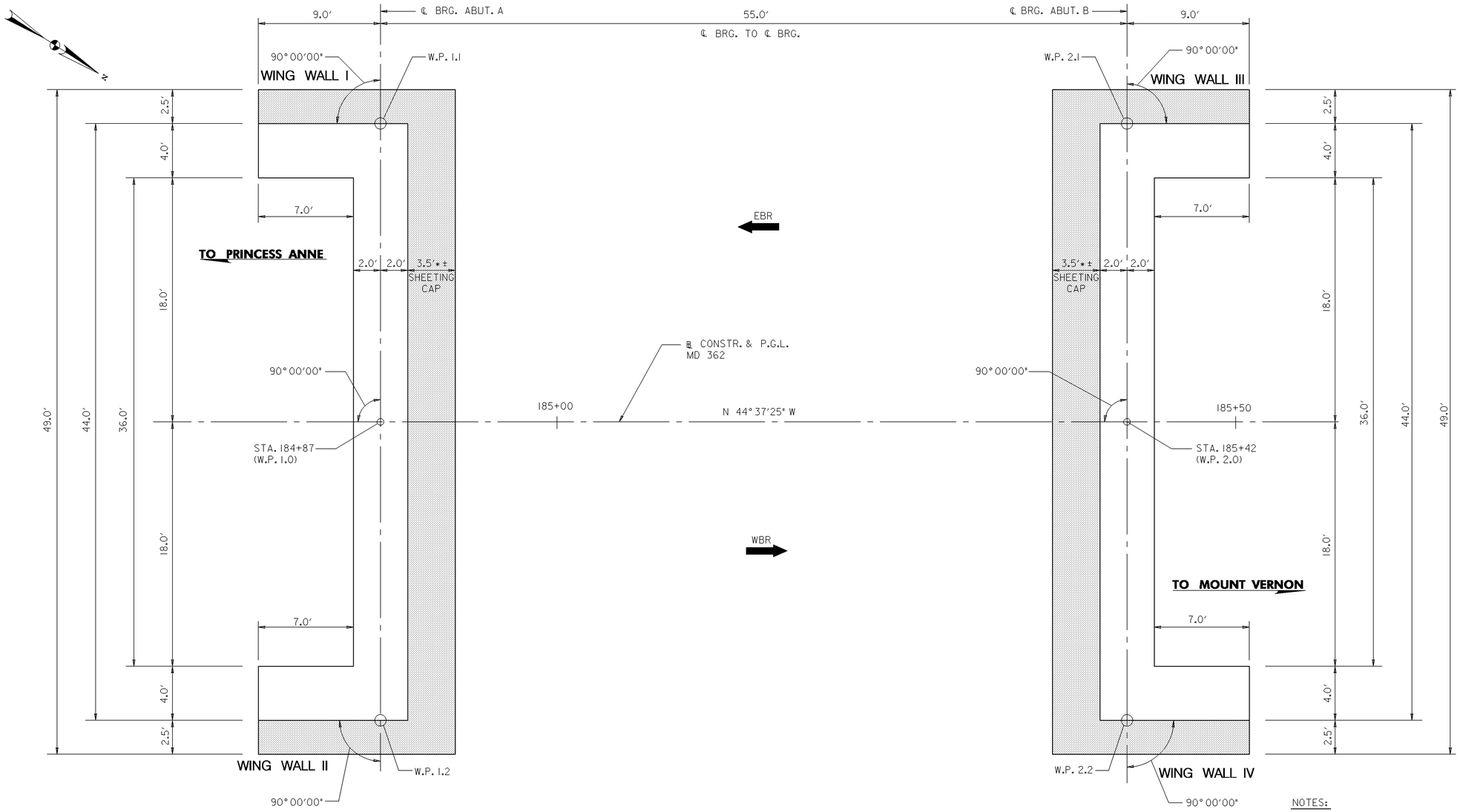

PLAN

SCALE: 1/4" = 1′-0"

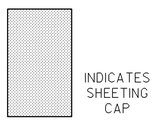

NOTES:

FOR GENERAL PLAN AND ELEVATION, SEE SHEET NO. S-1.
FOR ABUTMENT A PLAN AND ELEVATION, SEE SHEET NO. S-7 OR S-16.
FOR ABUTMENT B PLAN AND ELEVATION, SEE SHEET NO. S-8 OR S-17.
FOR PILE LAYOUT PLAN, SEE SHEET NO. S-6 OR S-15.
FOR TRAVERSE POINTS AND BASELINE COORDINATES, SEE SHEET RG-1.

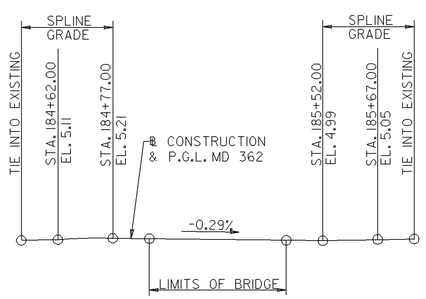

VERTICAL CURVE DATA

SCALE: NONE

NOTE:

* THE SHEETING CAP WILL EXTEND BETWEEN THE BACK OF THE EXISTING ABUTMENT AND THE FRONT OF THE PROPOSED ABUTMENT. THIS DIMENSION MAY VARY. SEE SHEET S-5 OR S-14 FOR ADDITIONAL DETAILS.

W.P.	STATION	OFFSET	NORTH	EAST
1.0	184+87	0′	205915.8227	1670812.9241
1.1	184+87	22.0′ LT	205900.3689	1670797.2658
1.2	184+87	22.0′ RT	205931.2765	1670828.5823
2.0	185+42	0′	205954.9683	1670744.2896
2.1	185+42	22.0′ LT	205939.5146	1670758.6314
2.2	185+42	22.0′ RT	205970.4221	1670789.9479

S-3

REVISIONS

STATE OF MARYLAND
DEPARTMENT OF TRANSPORTATION
STATE HIGHWAY ADMINISTRATION
OFFICE OF BRIDGE DEVELOPMENT

PRESTRESSED CONCRETE SLAB PANEL
BRIDGE NO. 19005
ON MD 362 (MOUNT VERNON ROAD)
OVER MONIE CREEK
GEOMETRIC LAYOUT

SCALE AS SHOWN DATE OCT., 2008 CONTRACT SO4215180

DESIGNED BY W.N.P.
DRAWN BY W.N.P., GLYNIS
CHECKED BY JCN

E.S.F.
10-14-08

SHEET NO. 16 OF 50

OTHER CONTRACTS FOR THIS STRUCTURE

STRUCTURE INVENTORY NO. 1900500

SURVEY BOOK NO. 31496

S:\CADD\OBD\1900500\016_19005geo.dgn
PRINT DATE: Tuesday, October 06, 2009 at 7:51:45 AM

INDEXED

SEQUENCE OF CONSTRUCTION

CONSTRUCTION PROCEDURE

- CONTRACTOR HAS THE OPTION OF UTILIZING PRECAST ABUTMENT UNITS AS OPPOSED TO CAST IN PLACE CONSTRUCTION. SEE NOTICE TO CONTRACTOR SPECIAL PROVISION IN INVITATION FOR BID FOR SPECIAL BIDDING PROCEDURE.
- REGARDLESS OF OPTION THE CONTRACTOR SHALL FOLLOW THIS PROCEDURE:

1. PRIOR TO THE PROPOSED 5 WEEK FULL BRIDGE & ROADWAY CLOSURE PERIOD, THE CONTRACTOR SHALL EXCAVATE EXISTING PAVEMENT, AUGER HOLES, AND INSTALL PILES UTILIZING LANE CLOSURES. ONE WAY TRAFFIC SHALL BE USED TO ACCOMPLISH THIS WORK DURING DAYLIGHT HOURS. AS EACH PILE IS DRIVEN, A TEMPORARY CAP SHALL BE TACK WELDED ON THE PILE AND THE PILE LOCATIONS SHALL BE SURVEYED.
2. AT THE END OF EACH WORK DAY, THE CONTRACTOR SHALL PLACE PATCHING WITH HMA MATERIAL TO PROVIDE A SMOOTH LEVEL RIDING SURFACE OVER ALL DISTURBED ROADWAY AREAS. NO EQUIPMENT OR MATERIALS WILL BE LEFT AT THE SITE UNLESS IT IS COMPLETELY IN THE SHOULDER AREA BEHIND A CONCRETE BARRIER TO FULLY PROTECT IT FROM TRAFFIC. DURING EVENING HOURS, TWO LANES SHALL BE RESTORED. THIS OPERATION SHALL CONTINUE UNTIL ALL PILES ARE IN PLACE, FOR EROSION AND SEDIMENT CONTROLS, SEE SHEETS ES–1 AND ES–2.
3. THE CONTRACTOR SHALL THEN CLOSE THE ROAD TO ALL TRAFFIC FOR THE PROPOSED 5 WEEK CLOSURE PERIOD. (SEE THE INCENTIVE /DISINCENTIVE CLAUSE IN SPECIAL PROVISIONS)

4a. IF THE CONTRACTOR ELECTS TO USE PRECAST ABUTMENTS – THE FOLLOWING PROCEDURE SHALL BE FOLLOWED:

a) CLOSE ROAD AND EXCAVATE TO PROPOSED BOTTOM OF CAP.
b) PLACE LEVELING DEVICES AND BACKFILL AS NECESSARY TO PROVIDE A LEVEL BENCH AT THE SPECIFIED ELEVATION.
c) CUT OFF PORTIONS OF NEWLY DRIVEN PILES, REMOVE PORTIONS OF EXISTING ABUTMENTS AND WING WALLS, AND DRIVE SHEETING TO SPECIFIED ELEVATONS.
d) FILL PIPE PILE WITH CONCRETE 1'–0" BELOW BOTTOM OF PILE REINFOREMENT.
e) SET REBAR CAGE IN PIPE PILES.
f) SET PRECAST CAPS ON TOP OF PIPE PILES.
g) USE LEVELING DEVICES TO ACHIEVE SPECIFIED TOP OF CAP ELEVATION.
h) SPLICE CAP REINFORCEMENT.
i) PLACE CONCRETE CLOSURE POURS.
j) ALLOW CAST–IN–PLACE CONCRETE TO CURE.

4b. IF THE CONTRACTOR ELECTS TO USE CAST–IN–PLACE CONSTRUCTION:

a) CLOSE ROAD AND EXCAVATE TO PROPOSED BOTTOM OF CAP.
b) CUT OFF PORTIONS OF NEWLY DRIVEN PILES, REMOVE PORTIONS OF EXISTING ABUTMENTS AND WING WALLS, AND DRIVE SHEETING TO SPECIFIED ELEVATONS.
c) FILL PIPE PILES WITH CONCRETE 1'–0" BELOW BOTTOM OF PILE REINFORCEMENT.
d) SET REBAR CAGE IN PIPE PILES.
e) SET AND TIE THE REBAR FOR PROPOSED SUBSTRUCTURE.
f) FORM, POUR, AND CURE CONCRETE FOR PROPOSED SUBSTRUCTURE.

5. ONCE THE ABUTMENTS AND WING WALLS ARE COMPLETE AND CURED THE CONTRACTOR MAY PROCEED WITH COMPLETION OF ALL REMAINING WORK. REGARDLESS OF THE OPTION SELECTED, LOADS CAN NOT BE APPLIED TO THE SUBSTRUCTURE, INCLUDING THE CLOSURE POURS, UNTIL PROPER CURING HAS OCCURED CONFORMING TO SECTION 420.03.15.

SUBSTRUCTURE OPTIONS

THE CONTRACTOR SHALL HAVE THE OPTION TO CONSTRUCT THE ABUTMENT CAPS AND WING WALL CAPS AND STEMS USING ANY OF THE FOLLOWING OPTIONS. THE OPTION SELECTED SHALL BE INDICATED ON THIS SHEET WITH A REDLINE REVISION:

ABUTMENT CAP

☐ CAST–IN–PLACE THE ENTIRE CAP

[I] ☒ PRECAST CAP IN FOUR SECTIONS WITH THREE CLOSURE POURS AS SHOWN

☐ PRECAST CAP IN THREE SECTIONS WITH TWO CLOSURE POURS AS SHOWN

☐ PRECAST ABUTMENT AND WING WALL CAPS IN TWO SECTIONS WITH ONE CLOSURE POUR AS SHOWN

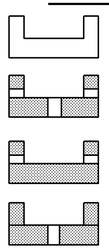

☐ PRECAST CAP IN TWO SECTIONS WITH ONE CLOSURE POUR, CAST–IN–PLACE WING WALLS, AS SHOWN

☐ PRECAST CAP IN ONE SECTION WITH NO CLOSURE POUR, CAST–IN–PLACE WING WALLS, AS SHOWN

☐ PRECAST ABUTMENT AND WING WALL CAPS IN ONE SECTION WITH NO CLOSURE POURS, AS SHOWN

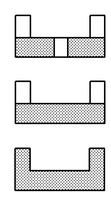

PLAN

WING WALLS

☐ CAST–IN–PLACE ENTIRE WING WALL

[I] ☒ PRECAST WING WALL CAP AND CAST–IN–PLACE WING WALL STEM

☐ PRECAST ENTIRE WING WALL

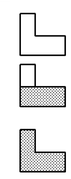

SECTION

LEGEND

PRECAST

CAST–IN–PLACE

OPTION NOTES

1. NO ADDITIONAL TIME OR COMPENSATION SHALL BE GIVEN REGARDLESS OF THE OPTION SELECTED, AS INDICATED ON THIS SHEET.
2. THE CONTRACTOR MAY HAVE TO MOBILIZE EQUIPMENT LARGER THAN IS REQUIRED TO SET THE PRESTRESSED SLAB PANELS, DEPENDING ON THE OPTION SELECTED.
3. IF A PRECAST OPTION IS SELECTED, THE CONTRACTOR WILL BE THE RESPONSIBLE FOR INSTALLING AND DESIGNING LIFTING DEVICES AND LEVELING DEVICES. ALL LIFTING DEVICES SHALL HAVE A MINIMUM FACTOR OF SAFETY OF 2.0. THE COST OF THE LIFTING AND LEVELING DEVICES SHALL BE INCIDENTAL TO THE "SUBSTRUCTURE CONCRETE" ITEM. AFTER THE PRECAST CAPS HAVE BEEN PLACED IN THEIR PROPER LOCATIONS, ALL LIFTING DEVICES SHALL BE CUT OFF FLUSH WITH THE CAP FACE AND COVERED WITH AN APPROVED EPOXY COATING.
4. IF A PRECAST OPTION IS SELECTED AND CLOSURE POURS ARE USED, THE CONTRACTOR SHALL USE A TEMPLATE TO SET REINFORCING AT THE ENDS OF PRECAST SECTIONS TO ENSURE THAT REINFORCING WILL BE ALIGNED BETWEEN SECTIONS.
5. THE COST OF THE CLOSURE POURS SHALL BE INCIDENTAL TO THE "SUBSTRUCTURE CONCRETE" ITEM.
6. ALTERNATE REINFORCEMENT DETAILS OTHER THAN THOSE SHOWN IN THESE PLANS MUST BE APPROVED BY THE ADMINISTRATION IN WRITING. ADDITIONAL BARS MAY BE REQUIRED ON THE SIDES OF THE PRECAST CAP FOR FLIPPING IN CASE THE SECTIONS ARE SHIPPED UP SIDE DOWN. THE CONTRACTOR SHALL BE RESPONSIBLE FOR ENSURING THAT THE PRECAST SECTION HAS SUFFICIENT REINFORCEMENT FOR THE PLACEMENT METHOD SELECTED.
7. PRIOR TO SETTING ANY CAPS, THE EXACT PILE LOCATIONS AND ELEVATIONS MUST BE CHECKED TO VERIFY THAT THE SPECIFIED LOCATIONS AND ELEVATIONS HAVE BEEN ACHIEVED.
8. THE LOCATIONS OF THE LEVELING DEVICES SHOWN IN THE PLANS ARE ONLY SUGGESTED. THE LOCATIONS OF THE LEVELING DEVICES SHOWN IN THE PLANS AND THE TYPE USED ARE THE SOLE RESPONSIBILITY OF THE CONTRACTOR. THE CONTRACTOR IS PERMITTED TO WELD TO THE PIPE PILES, AS NECESSARY FOR PLACING LEVELING DEVICES.
9. LEVELING DEVICES SHALL REMAIN IN PLACE UNTIL ALL CLOSURE POUR LOCATIONS HAVE CURED IN CONFORMANCE WITH 420.03.08. IF DURING CONSTRUCTION ANY WEAKNESS, SETTLEMENT OR DISTORTION DEVELOPS, THE WORK SHALL BE STOPPED AND ANY CONCRETE AFFECTED SHALL BE REMOVED AND REPLACED AT NO ADDITIONAL COST TO THE ADMINISTRATION.
10. THE CONTRACTOR MAY SUBMIT IN WRITING AN ALTERNATE OTHER THAN WHAT IS SHOWN IN THESE PLANS CONCEPT FOR COMPLETING THE SUBSTRUCTURE WORK FOR THE BRIDGE. THE ADMINISTRATION SHALL MAKE THE SOLE DETERMINATION OF THE CONCEPTS ACCEPTANCE. IF THE CONCEPT IS REJECTED, THE CONTRACTOR SHALL UTILIZE AN OPTION SHOWN IN THESE PLANS. NO ADDITIONAL COST WILL BE ALLOWED REGARDLESS OF THE FINAL OPTION UTILIZED.

S-4

REVISIONS

[I] RED LINE NO. 1 INDICATED THE OPTION SELECTED. 02 /23 /09 GLYNES

STATE OF MARYLAND
DEPARTMENT OF TRANSPORTATION
STATE HIGHWAY ADMINISTRATION
OFFICE OF BRIDGE DEVELOPMENT
PRESTRESSED CONCRETE SLAB PANEL
BRIDGE NO. 19005
ON MD 362 (MOUNT VERNON ROAD)
OVER MONIE CREEK
SEQUENCE OF CONSTRUCTION /OPTIONS NOTES

SCALE AS SHOWN DATE OCT., 2008 CONTRACT SO4215180

DESIGNED BY W.N.P.
DRAWN BY
CHECKED BY JCN
E.S.F.
10-14-08

SHEET NO. 17 OF 50

OTHER CONTRACTS FOR THIS STRUCTURE

STRUCTURE INVENTORY NO. 1900500 SURVEY BOOK NO. 31496

S:\CADD\OBD\1900500\017_19005SCN.dgn
PRINT DATE: Tuesday, October 06, 2009 at 7:52:26 AM

INDEXED

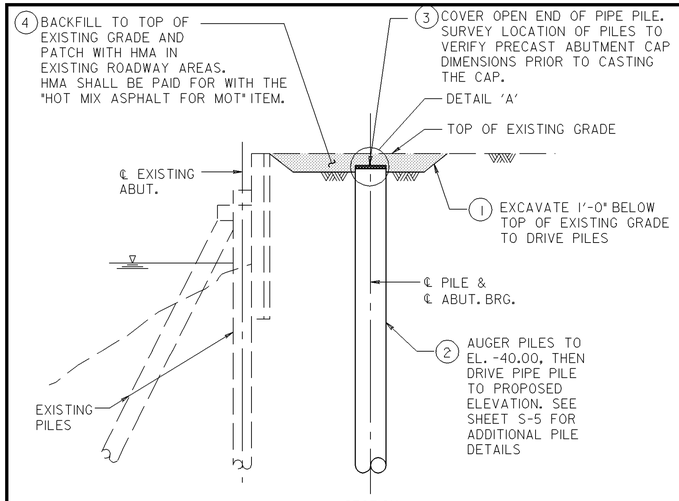

SECTION

STEP 1 (PRIOR TO 5 WEEK FULL CLOSURE PERIOD)
USING LANE CLOSURES, DRIVE ALL PIPE PILES

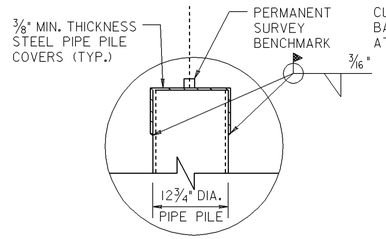

DETAIL 'A'

SCALE: 1" = 1'-0"

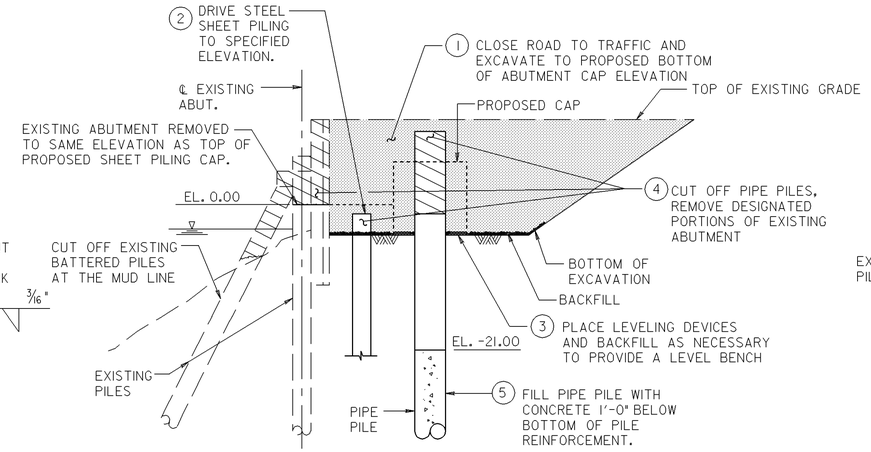

SECTION

STEP 2 (DURING 5 WEEK CLOSURE PERIOD)
EXCAVATE BENCH TO PROPOSED BOTTOM OF CAP ELEVATION AND CUT OFF PILES AND EXISTING ABUTMENT AND DRIVE SHEET PILING

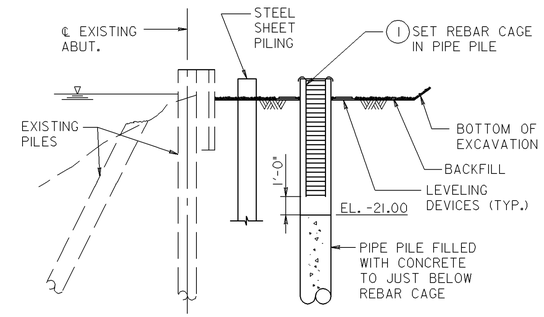

SECTION

STEP 3
PLACE PILE REINFORCEMENT

NOTE:

SEE SECTION 440.03.19 FOR DETAILS OF THE LIMITS OF HEAVY EQUIPMENT PLACEMENT BEHIND THE ABUTMENT.

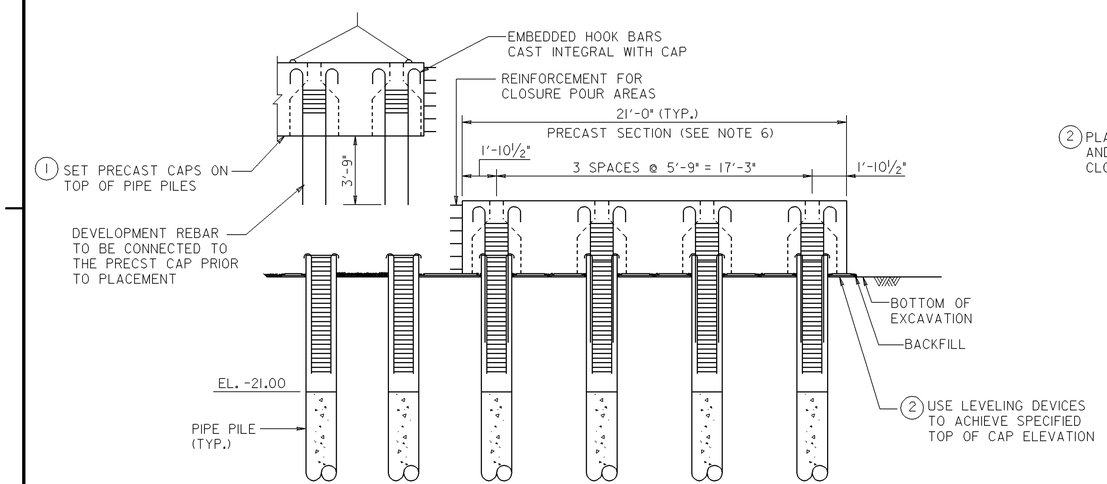

ELEVATION

STEP 4
SET AND LEVEL PRECAST ABUATMENT CAPS

NOTE:

EXISTING ABUTMENT AND SHEET PILING NOT SHOWN FOR CLARITY.

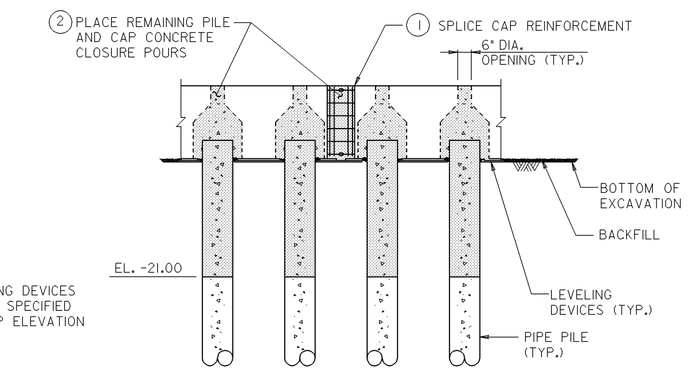

ELEVATION

STEP 5
PLACE CONCRETE CLOSURE POURS

NOTE:

EXISTING ABUTMENT AND SHEET PILING NOT SHOWN FOR CLARITY.

NOTES:

FOR GENERAL PLAN AND ELEVATION, SEE SHEET NO. S-1.
FOR ABUTMENT A PLAN AND ELEVATION, SEE SHEET NO. S-7.
FOR ABUTMENT B PLAN AND ELEVATION, SEE SHEET NO. S-8.
FOR PILE LAYOUT PLAN, SEE SHEET NO. S-6.

SEQUENCE OF CONSTRUCTION

SCALE: 1/4" = 1'-0"

FOR ADDITIONAL INFORMATION ON THE PRECAST OPTIONS SEE SHEET NO. S-4.

PRECAST OPTION | S-5

REVISIONS

STATE OF MARYLAND
DEPARTMENT OF TRANSPORTATION
STATE HIGHWAY ADMINISTRATION
OFFICE OF BRIDGE DEVELOPMENT

PRESTRESSED CONCRETE SLAB PANEL
BRIDGE NO. 19005
ON MD 362 (MOUNT VERNON ROAD)
OVER MONIE CREEK
PRECAST ABUTMENT CAP – SEQ. OF CONSTRUCTION

SCALE AS SHOWN DATE OCT., 2008 CONTRACT SO4215180

DESIGNED BY W.N.P.
DRAWN BY GLYNIS
CHECKED BY JCN
E.S.F.
10-14-08

SHEET NO. 18 OF 50

OTHER CONTRACTS FOR THIS STRUCTURE

STRUCTURE INVENTORY NO. 1900500

SURVEY BOOK NO. 31496

S:\CADD\OBD\1900500\018_19005pacseq.dgn
PRINT DATE: Tuesday, October 06, 2009 at 7:53:02 AM

INDEXED

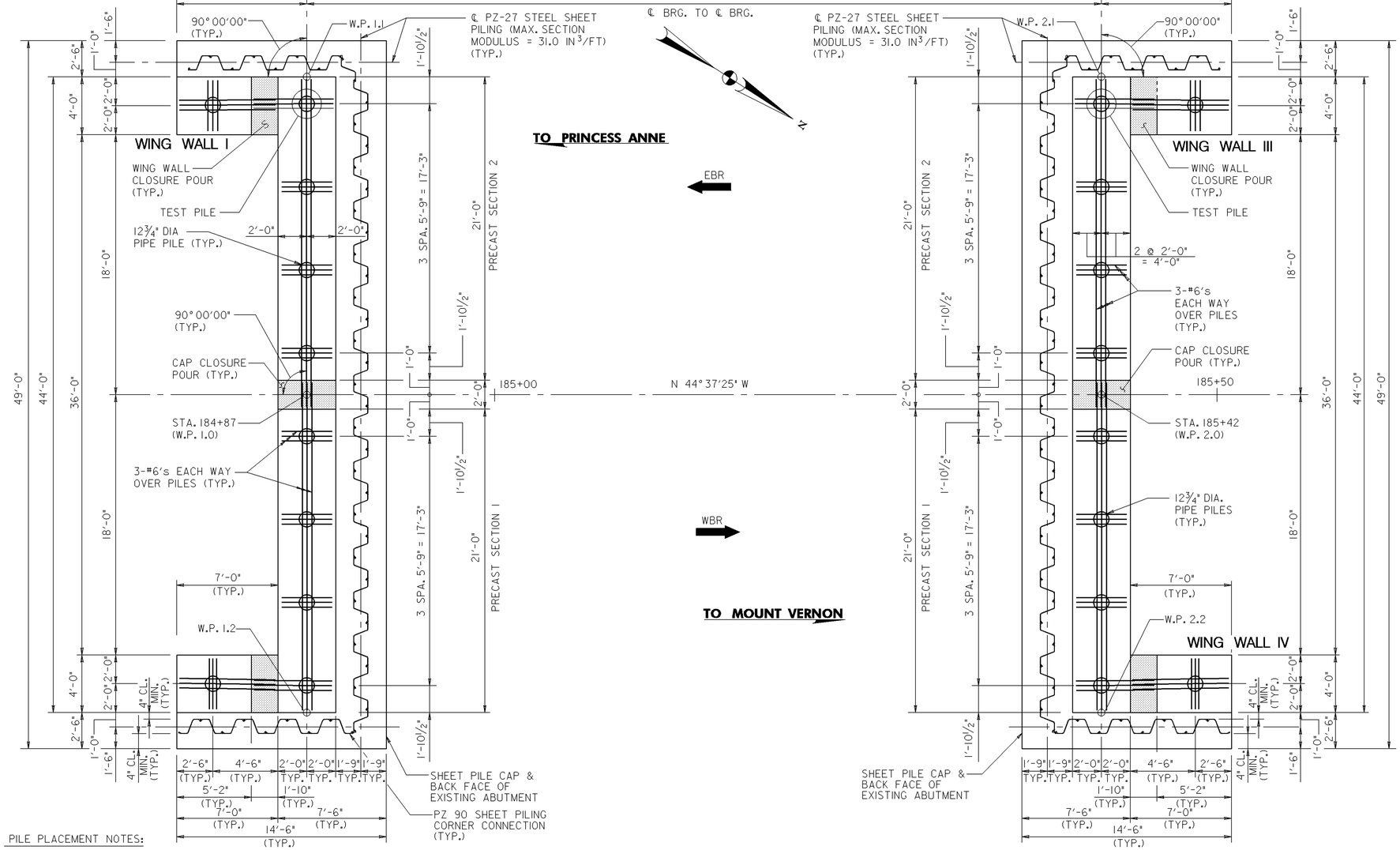

PLAN

SCALE: 1/4" = 1'-0"

PILE PLACEMENT NOTES:

1. PRIOR TO PLACING PILES, THE CONTRACTOR SHALL PLACE A PILE TEMPLATE TO HOLD THE PILES TRUE AND ACCURATE.
2. ALL PILES SHALL BE DRIVEN CLOSED ENDED TO THE REQUIRED DEPTHS AND BEARING CAPACITY. SEE STANDARD ON SHEET S-30 FOR PILE POINT FOR PIPE PILE DETAILS.
3. MIX. NO. 3 CONCRETE SHALL BE PLACED IN THE PILE THE FULL HEIGHT OF THE PILE.
4. NOTCHED SLEEVE SPLICE MATERIAL SHALL BE A 709, GRADE 50.
5. ALL SPLICE SLEEVES SHALL BE SHOP FABRICATED.
6. COST OF PILE SPLICES, REBAR, STEEL PLATES FOR PILE TIPS, AND PREAUGERING SHALL BE INCIDENTAL TO THE PERTINENT PILE ITEM.
7. THE CONTRACTOR SHALL HAVE THE OPTION TO USE A DIFFERENT STEEL SHEETING TYPE THAT SATISFIES THE MINIMUM SECTION MODULUS PROVIDED BY THE PZ 27 SHEETNG SHOWN ON THE PLANS. NO OPTION WILL BE CONSIDERED WITH A SHEETING WALL THICKNESS LESS THAN 3/8". IF THE CONSTRACTOR SELECTS A DEEPER SECTION, THE MINIMUM CLEARANCES MUST BE MAINTAINED. NO ADDITIONAL COST SHALL BE GIVEN REGARDLESS OF THE SHEETING OPTION SELECTED. THE CONTRACTOR SHALL HAVE THE RESPONSIBILITY TO LAYOUT THE SHEETING TO ENSURE THAT ALL SECTIONS TIGHTLY CONNECT TOGETHER. ALL CONNECTORS, INCLUDING AT THE SHEETING CORNERS, NECESSARY TO PROVIDE TIGHT CONNECTIONS, SHALL BE INCIDENTAL TO THE COST OF THE "STEEL SHEET PILING" ITEM.

*8. THE COST OF CONCRETE WITHIN THE PILE ABOVE EL. -21.00 SHALL BE INCIDENTAL TO THE "SUBSTRUCTURE CONCRETE" ITEM. THE COST OF CONCRETE WITHIN THE PILE BELOW EL. -21.00 SHALL BE INCIDENTAL TO THE PERTINENT PILE ITEM.

9. THE CONTRACTOR SHALL FILL BETWEEN THE PILE AND THE AUGER HOLE WITH AN APPROVED FLOWABLE BACKFILL. THE CONTRACTOR SHALL ENSURE THAT NO VOIDS REMAIN BETWEEN THE PILE AND THE AUGER HOLE.

FOR ADDITIONAL INFORMATION ON THE PRECAST OPTIONS SEE SHEET NO. S-4.

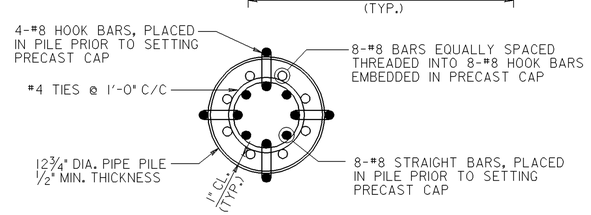

ABUTMENT PILE REINFORCEMENT SECTION

SCALE: 1 1/2" = 1'-0"

PILE DATA

	DESIGN DATA				ACTUAL FIELD DATA	
SUBSTRUCTURE UNIT	DESIGN BEARING VALUE	MINIMUM SAFE BEARING VALUE	MIN. PENETRATION ELEVATION	ESTIMATED TIP ELEVATION	AVE. ACTUAL MIN. TIP ELEV.	AVE. ACTUAL MAX. TIP ELEV.
ABUTMENT A	100 TONS	120 TONS	-105.00	-110.00		
ABUTMENT B	100 TONS	120 TONS	-105.00	-110.00		

PILE DRIVING INFORMATION

PILE SIZE AND TYPE: 12¾" DIA. STEEL PIPE PILE (CLOSED ENDED)
REQUIRED PILE HAMMER ENERGY:
ACTUAL BEARING OBTAINED:
HAMMER TYPE:
REQUIRED BLOWS/FT.:
ACTUAL PILE HAMMER ENERGY:
SPECIAL DRIVING CONDITIONS AND COMMENTS:

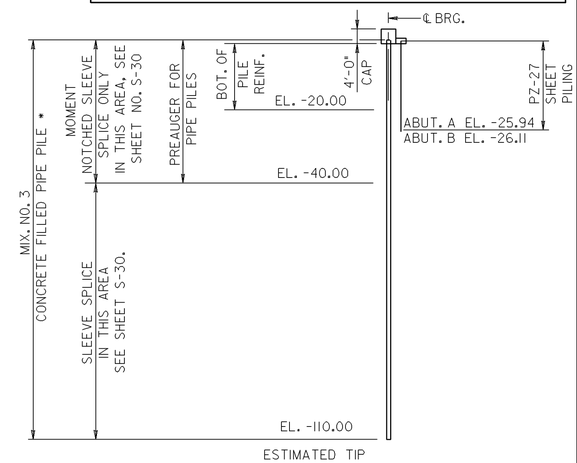

PILE – ELEVATION

SCALE: 1" = 20'-0"

NOTES:

1. ALL PILES TO BE 12¾" DIA. CLOSED ENDED CONCRETE FILLED STEEL PIPE PILING WITH A MINIMUM WALL THICKNESS OF 1/2" DRIVEN TO A MINIMUM SAFE BEARING CAPACITY OF 120 TONS (DESIGN LOAD 100 TONS). NO PILES WITH A WALL THICKNESS OF LESS THAN 1/2" WILL BE ACCEPTED.
2. ALL PILES SHALL BE PLUMB.
3. THE MINIMUM SAFE BEARING VALUE AND MINIMUM PENETRATION ELEVATION SHOWN ON THESE PLANS MUST BE ACHIEVED FOR EACH PILE. IF THE ESTIMATED TIP ELEVATION IS NOT REACHED OR EXCEEDED WHILE ACHIEVING THE MINIMUM SAFE BEARING VALUE AND THE MINIMUM PENETRATION ELEVATION; THE PILE WILL BE CONSIDERED SATISFACTORY.
4. SHOP PLANS SHALL SHOW HOW REBARS ARE TO BE TIED AS WELL AS HOW THEY WILL BE HELD IN PLACE ABOVE PILING WHILE POUR IS BEING MADE.
5. FOR ADDITIONAL ABUTMENT AND WING WALL DETAILS, SEE SHEET NOS. S-7 THRU S-12.
6. FOR ADDITIONAL SHEET PILING DETAILS, SEE SHEET NO. S-13.
7. FOR BORING AND DRIVE TESTS, SEE SHEET NO. S-35.
8. FOR ADDITIONAL REBAR DETAILS, SEE SHEET NOS. S-31 THRU S-34.

PRECAST OPTION | S-6

REVISIONS

STATE OF MARYLAND
DEPARTMENT OF TRANSPORTATION
STATE HIGHWAY ADMINISTRATION
OFFICE OF BRIDGE DEVELOPMENT

PRESTRESSED CONCRETE SLAB PANEL
BRIDGE NO. 19005
ON MD 362 (MOUNT VERNON ROAD)
OVER MONIE CREEK
PILE LAYOUT

SCALE AS SHOWN DATE OCT., 2008 CONTRACT SO4215180

DESIGNED BY W.N.P.
DRAWN BY GLYNIS, J.T.
CHECKED BY JCN
E.S.F.
10-14-08

SHEET NO. 19 OF 50

INDEXED

OTHER CONTRACTS FOR THIS STRUCTURE

STRUCTURE INVENTORY NO. 1900500

SURVEY BOOK NO. 31496

S:\CADD\OBD\1900500\019_19005pl.dgn
PRINT DATE: Tuesday, October 06, 2009 at 7:53:34 AM

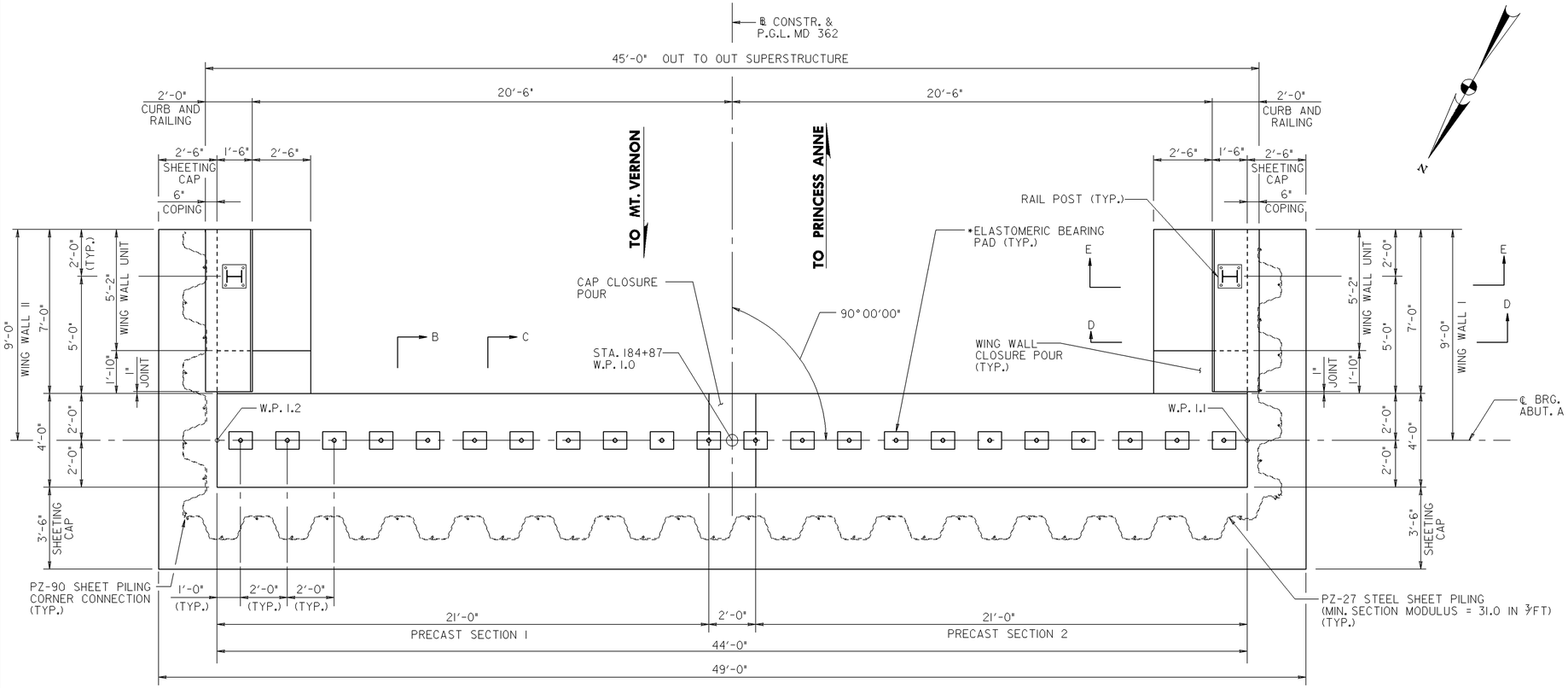

ABUTMENT A – PLAN

SCALE: 3/8" = 1'-0"

FOR ADDITIONAL INFORMATION ON THE PRECAST OPTIONS SEE SHEET NO. S-4.

NOTES:

*1. ALL ELASTOMERIC BEARING PADS SHALL BE PLACED WITH AN EPOXY ADHESIVE IN ACCORDANCE WITH 440.03.04. ADHESIVE SHALL BE APPLIED ON THE BOTTOM AND TOP OF PAD.

2. PILE SPACING SHOWN ON SHEET S-6.

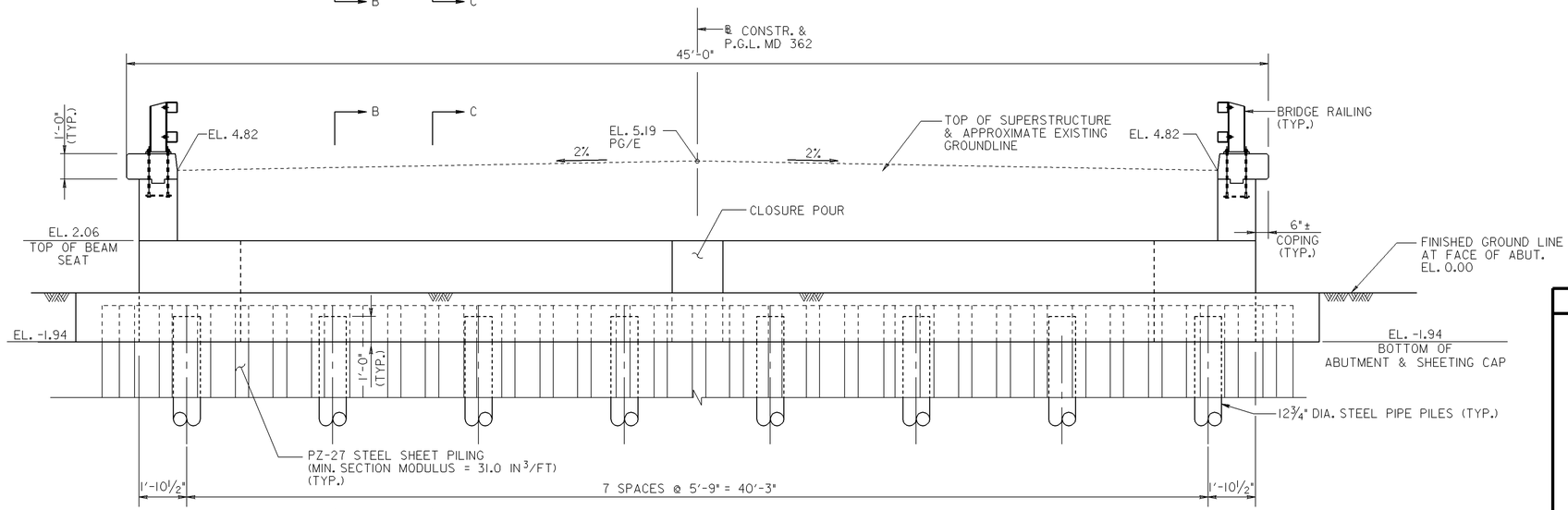

ABUTMENT A – ELEVATION

SCALE: 3/8" = 1'-0"

NOTES:

1. FOR GENERAL PLAN AND ELEVATION, SEE SHEET NO. S-1.
2. FOR GEOMETRIC LAYOUT, SEE SHEET NO. S-3.
3. FOR PILE LAYOUT PLAN, SEE SHEET NO. S-6.
4. FOR PRECAST ABUTMENT CAP SEQUENCES OF CONSTRUCTION, SEE SHEET NO. S-4.
5. FOR ABUTMENT DETAILS, SECTION B-B AND C-C, SEE SHEET NOS. S-9 AND S-10.
6. FOR WING WALL DETAILS, SECTION D-D AND E-E, SEE SHEET NOS. S-11 AND S-12.
7. FOR SHEET PILE CAP DETAILS, SEE SHEET NO. S-13.
8. FOR WORKING POINT LOCATIONS, SEE SHEET S-3.

PRECAST OPTION | S-7

REVISIONS

STATE OF MARYLAND
DEPARTMENT OF TRANSPORTATION
STATE HIGHWAY ADMINISTRATION
OFFICE OF BRIDGE DEVELOPMENT

PRESTRESSED CONCRETE SLAB PANEL
BRIDGE NO. 19005
ON MD 362 (MOUNT VERNON ROAD)
OVER MONIE CREEK
ABUTMENT A PLAN & ELEVATION

SCALE AS SHOWN DATE OCT., 2008 CONTRACT SO4215180

DESIGNED BY W.N.P.
DRAWN BY GLYNIS
CHECKED BY JCN
E.S.F.
10-14-08

SHEET NO. 20 OF 50

OTHER CONTRACTS FOR THIS STRUCTURE

STRUCTURE INVENTORY NO. 1900500

SURVEY BOOK NO. 31496

S:\CADD\OBD\1900500\020_19005abap&e.dgn
PRINT DATE: Tuesday, October 06, 2009 at 7:54:07 AM

INDEXED

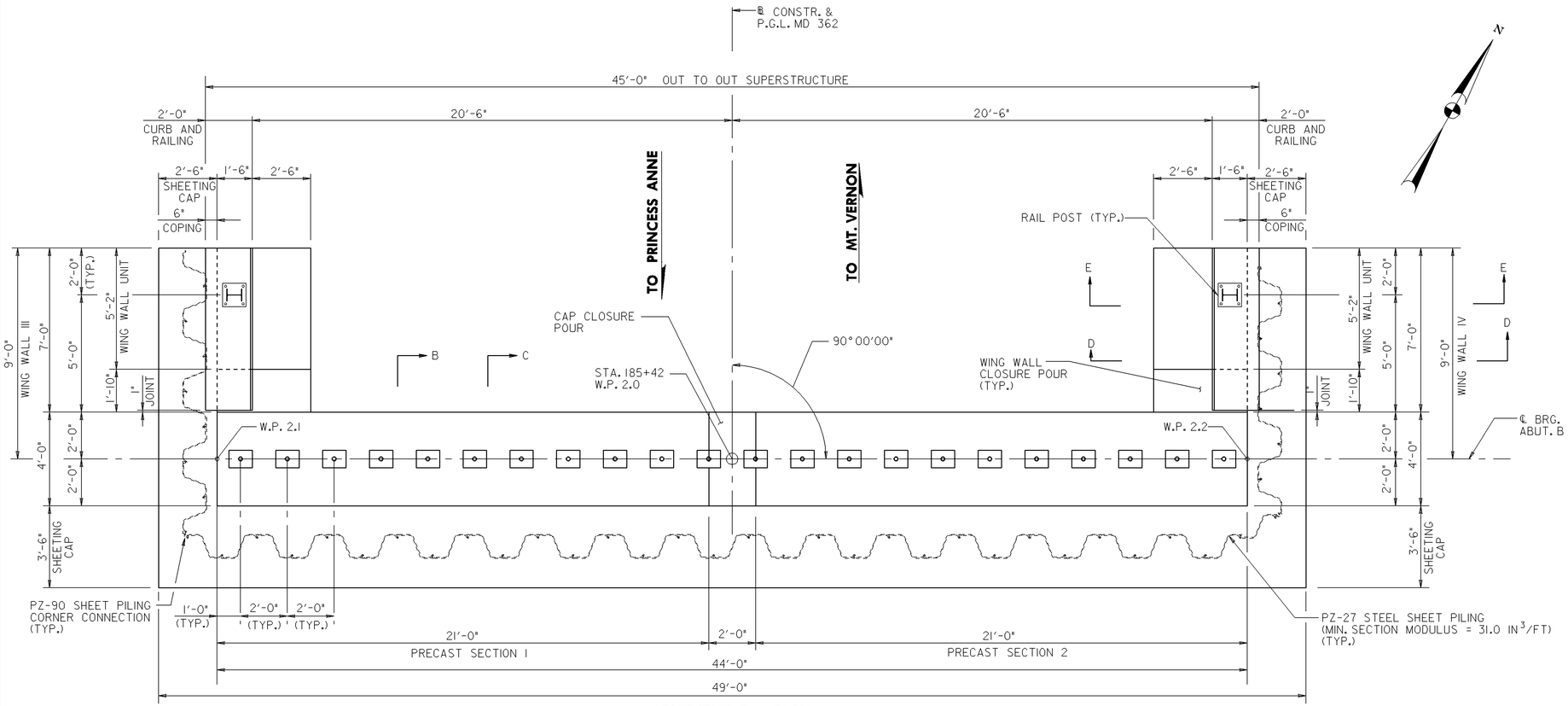

ABUTMENT B – PLAN

SCALE: 3/8" = 1'-0"

FOR ADDITIONAL INFORMATION ON THE PRECAST OPTIONS SEE SHEET NO. S-4.

NOTES:

*1. ALL ELASTOMERIC BEARING PADS SHALL BE PLACED WITH AN EPOXY ADHESIVE IN ACCORDANCE WITH 440.03.04. ADHESIVE SHALL BE APPLIED ON THE BOTTOM AND TOP OF PAD.

2. PILE SPACING SHOWN ON SHEET NO. S-6.

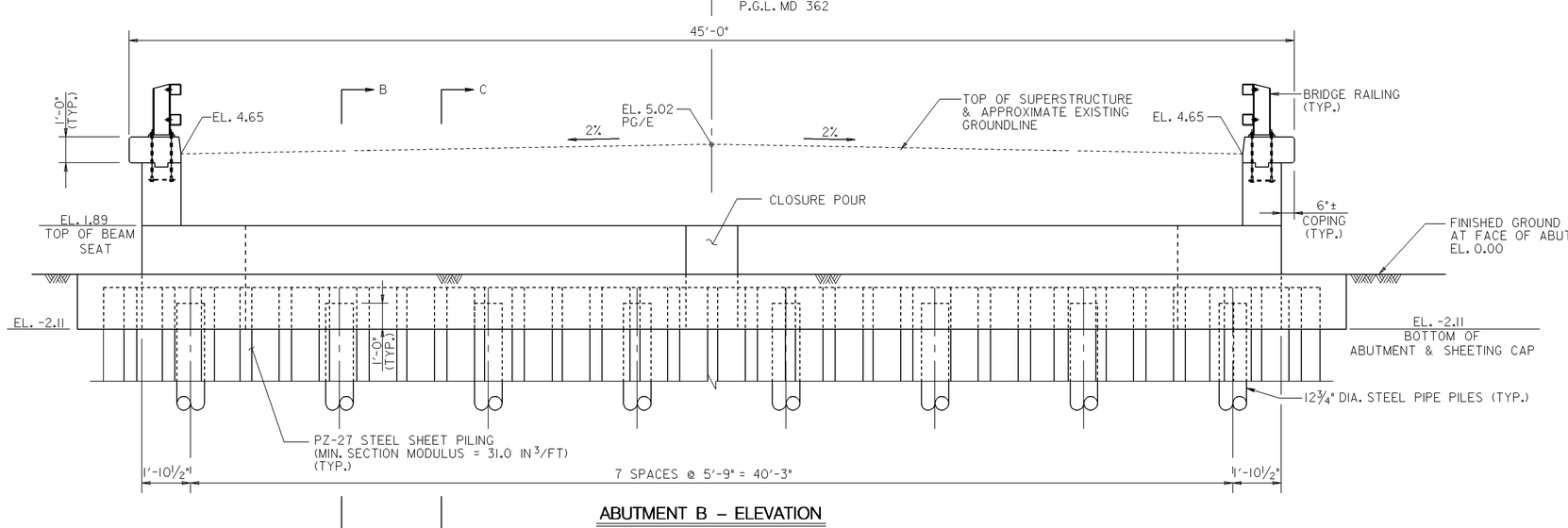

ABUTMENT B – ELEVATION

SCALE: 3/8" = 1'-0"

NOTES:

1. FOR GENERAL PLAN AND ELEVATION, SEE SHEET NO. S-1.
2. FOR GEOMETRIC LAYOUT, SEE SHEET NO. S-3.
3. FOR PILE LAYOUT PLAN, SEE SHEET NO. S-6.
4. FOR PRECAST ABUTMENT CAP SEQUENCES OF CONSTRUCTION, SEE SHEET NO. S-4.
5. FOR ABUTMENT DETAILS, SECTIONS B-B AND C-C, SEE SHEET NOS. S-9 AND S-10.
6. FOR WING WALL DETAILS, SECTIONS D-D AND E-E, SEE SHEET NOS. S-11 AND S-12.
7. FOR SHEET PILE CAP DETAILS, SEE SHEET NO. S-13.
8. FOR WORKING POINT LOCATIONS, SEE SHEET S-3.

PRECAST OPTION | S-8

REVISIONS

STATE OF MARYLAND
DEPARTMENT OF TRANSPORTATION
STATE HIGHWAY ADMINISTRATION
OFFICE OF BRIDGE DEVELOPMENT

PRESTRESSED CONCRETE SLAB PANEL
BRIDGE NO. 19005
ON MD 362 (MOUNT VERNON ROAD)
OVER MONIE CREEK
ABUTMENT B PLAN & ELEVATION

SCALE AS SHOWN | DATE OCT., 2008 | CONTRACT SO4215180

DESIGNED BY W.N.P.
DRAWN BY GLYNIS
CHECKED BY JCN

E.S.F.
10-14-08

SHEET NO. 21 OF 50

OTHER CONTRACTS FOR THIS STRUCTURE

STRUCTURE INVENTORY NO. 1900500

SURVEY BOOK NO. 31496

S:\CADD\OBD\1900500\021_19005abbp&e.dgn
PRINT DATE: Tuesday, October 06, 2009 at 7:54:33 AM

INDEXED

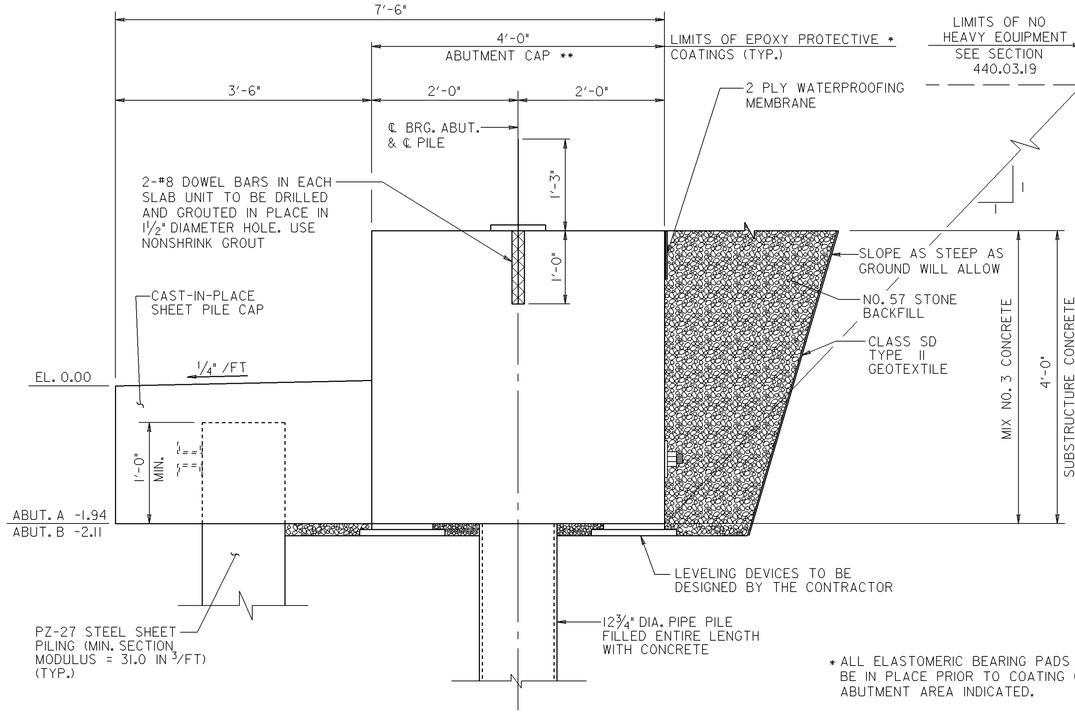

SECTION B-B – TYPICAL SECTION

SCALE: 1" = 1'-0"

* ALL ELASTOMERIC BEARING PADS SHALL BE IN PLACE PRIOR TO COATING OF THE ABUTMENT AREA INDICATED.

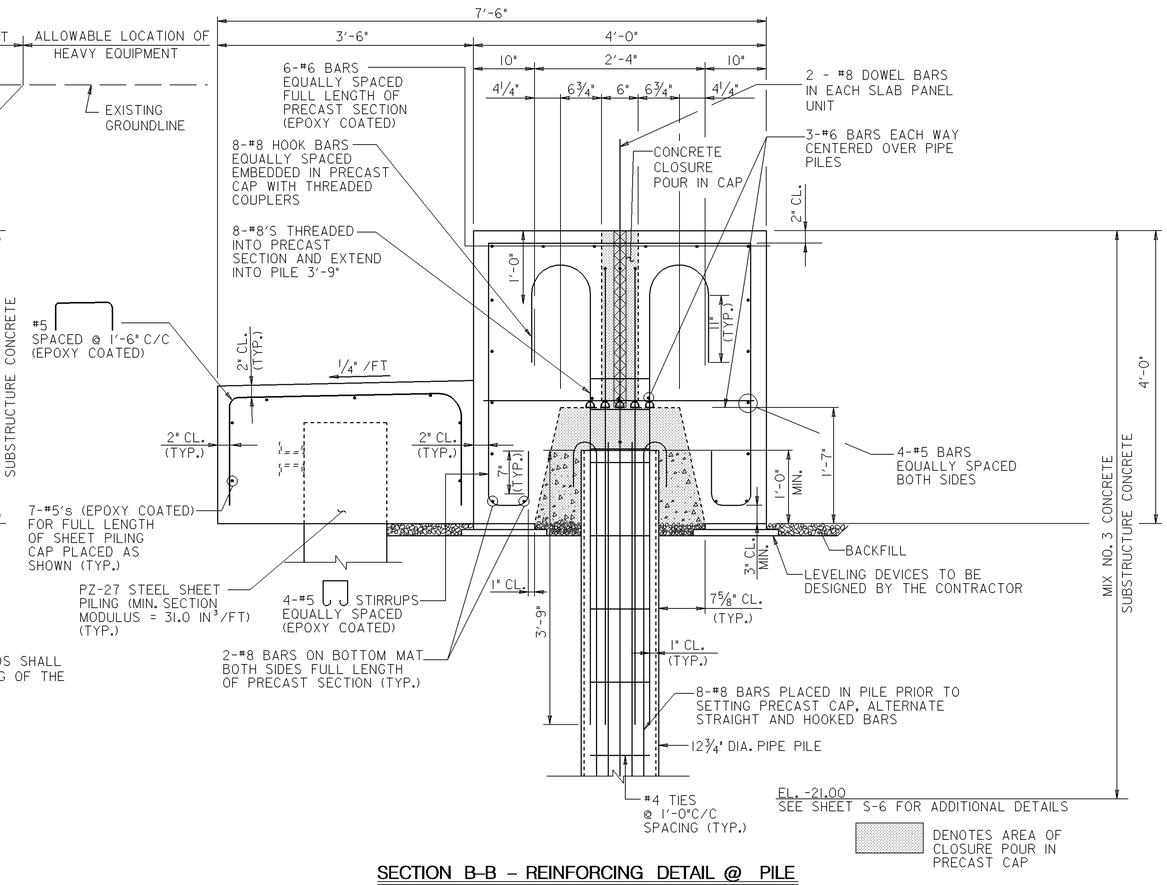

SECTION B-B – REINFORCING DETAIL @ PILE

SCALE: 1" = 1'-0"

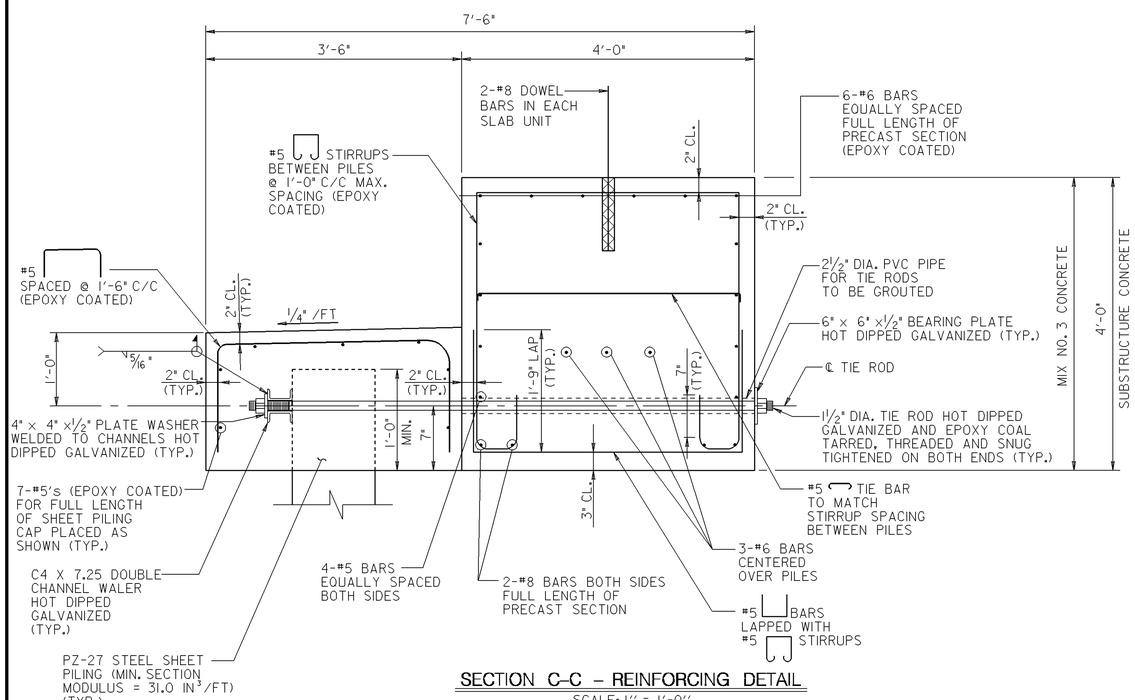

SECTION C-C – REINFORCING DETAIL

SCALE: 1" = 1'-0"

NOTES:

1. ALL REINFORCING STEEL WITHIN THE PILES FROM PILE TIP TO TOP OF PILE WILL NOT BE MEASURED FOR PAYMENT BUT SHALL BE INCIDENTAL TO THE PERTINENT PILING ITEM.
2. ALL CONCRETE, DRAINAGE PIPES, #57 STONE, GEOTEXTILE, AND REINFORCING STEEL WITHIN THE ABUTMENTS, WING WALLS, AND SHEET PILE CAPS WILL NOT BE MEASURED FOR PAYMENT BUT SHALL BE INCLUDED IN THE LUMP SUM PRICE BID ON THE "SUBSTRUCTURE CONCRETE" ITEM.

FOR ADDITIONAL INFORMATION ON THE PRECAST OPTIONS SEE SHEET NO. S-4.

NOTES:

1. FOR GENERAL PLAN AND ELEVATION, SEE SHEET NO. S-1.
2. FOR GEOMETRIC LAYOUT, SEE SHEET NO. S-3.
3. FOR PILE LAYOUT PLAN, SEE SHEET NO. S-6.
4. FOR PRECAST ABUTMENT CAP SEQUENCES OF CONSTRUCTION, SEE SHEET NO. S-4.
5. FOR ABUTMENT A PLAN AND ELEVATION, SEE SHEET NO. S-7.
6. FOR ABUTMENT B PLAN AND ELEVATION, SEE SHEET NO. S-8.
7. FOR ADDITIONAL ABUTMENT DETAILS, SEE SHEET NO. S-10.
8. FOR WING WALL DETAILS, SEE SHEET NOS. S-11 AND S-12.
9. FOR SHEET PILE CAP DETAILS, SEE SHEET NO. S-13.

PRECAST OPTION | S-9

REVISIONS

2 RED LINE NO. 2
NEW SHEET ADDED.
GLYNIS

STATE OF MARYLAND
DEPARTMENT OF TRANSPORTATION
STATE HIGHWAY ADMINISTRATION
OFFICE OF BRIDGE DEVELOPMENT

PRESTRESSED CONCRETE SLAB PANEL
BRIDGE NO. 19005
ON MD 362 (MOUNT VERNON ROAD)
OVER MONIE CREEK
ABUTMENT DETAILS I

SCALE AS SHOWN | DATE OCT., 2008 | CONTRACT SO4215180

DESIGNED BY W.N.P.
DRAWN BY
CHECKED BY JCN

E.S.F.
10-14-08

SHEET NO. 22 OF 50

OTHER CONTRACTS FOR THIS STRUCTURE

STRUCTURE INVENTORY NO. 1900500 | SURVEY BOOK NO. 31496

S:\CADD\OBD\1900500\022a_19005abutdetl-r2a.dgn
PRINT DATE: Tuesday, October 06, 2009 at 7:58:50 AM

INDEXED

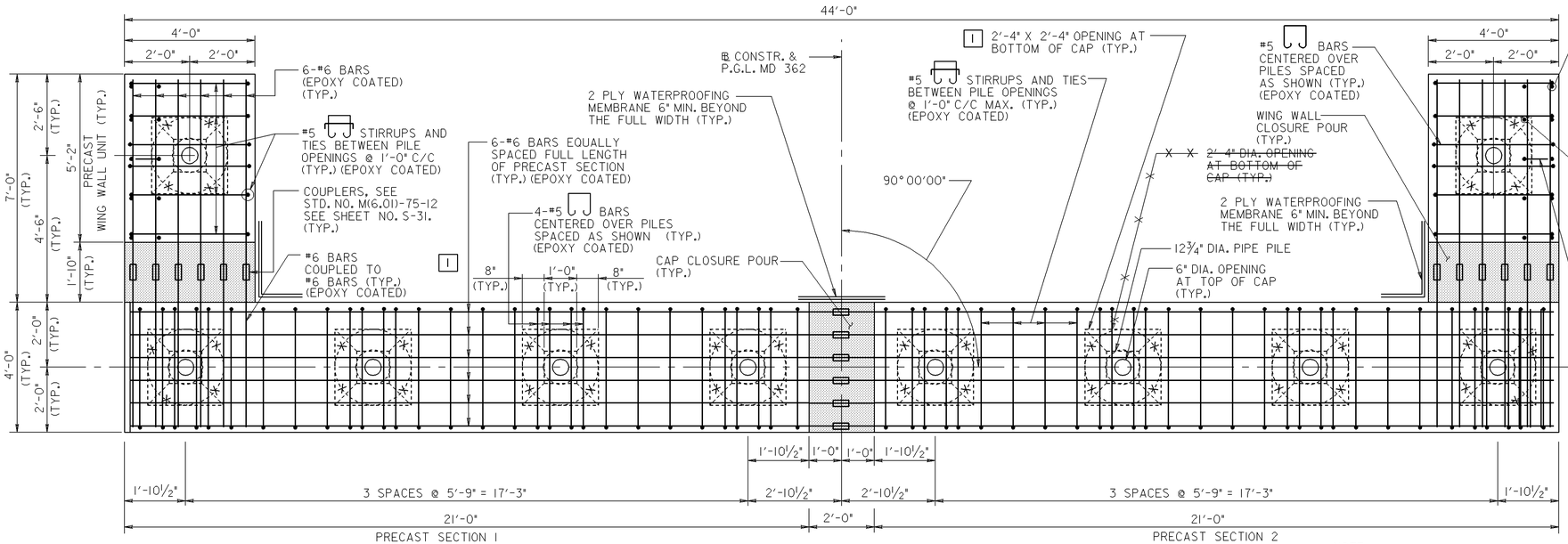

ABUTMENT TOP MAT – PLAN

SCALE: ½" = 1'-0"

NOTE:

#6 BARS OVER PILES NOT SHOWN FOR CLARITY

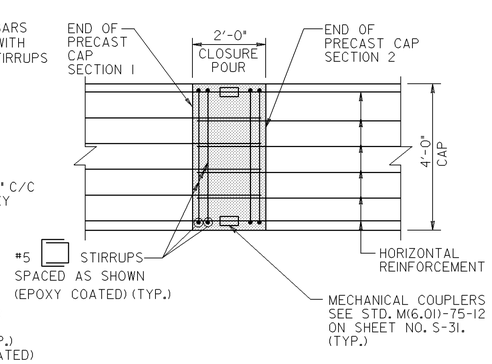

ABUTMENT CAP CLOSURE POUR DETAIL–ELEVATION

SCALE: ½" = 1'-0"

FOR ADDITIONAL INFORMATION ON THE PRECAST OPTIONS SEE SHEET NO. S-4.

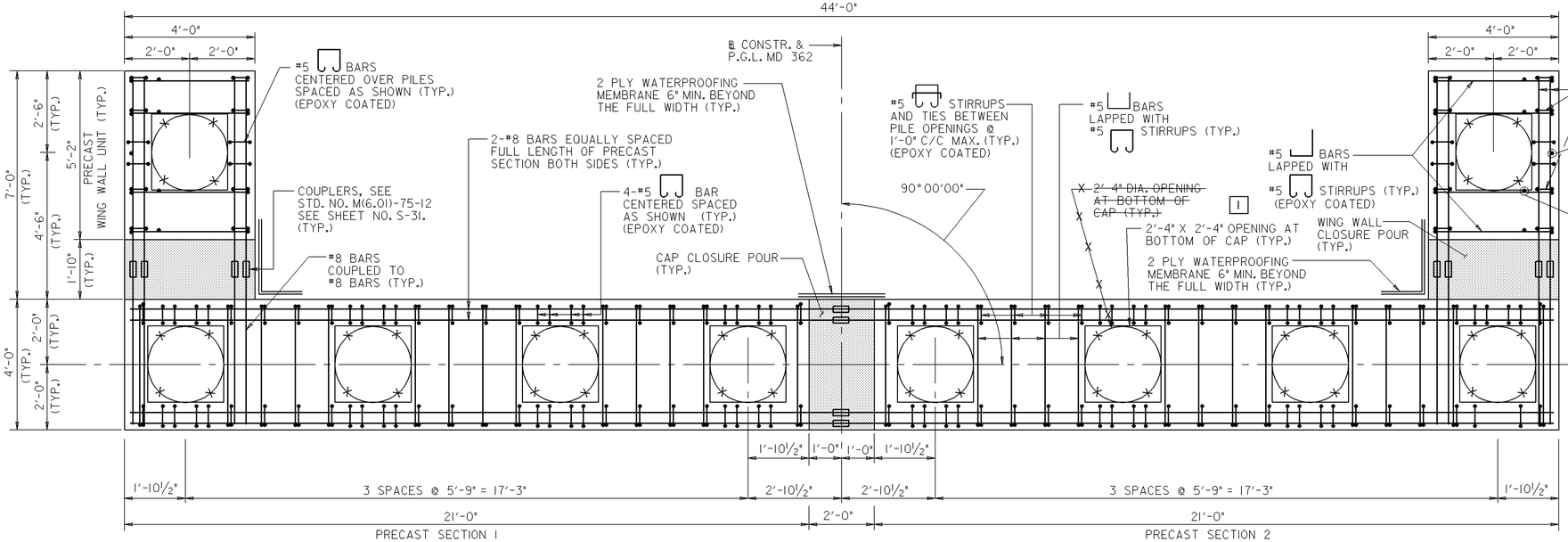

ABUTMENT BOTTOM MAT – PLAN

SCALE: ½" = 1'-0"

NOTES:

1. FOR GENERAL PLAN AND ELEVATION, SEE SHEET NO. S-1.
2. FOR GEOMETRIC LAYOUT, SEE SHEET NO. S-3.
3. FOR PILE LAYOUT PLAN, SEE SHEET NO. S-6.
4. FOR PRECAST ABUTMENT CAP SEQUENCES OF CONSTRUCTION, SEE SHEET NO. S-4.
5. FOR ABUTMENT A PLAN AND ELEVATION, SEE SHEET NOS. S-7.
6. FOR ABUTMENT B PLAN AND ELEVATION, SEE SHEET NOS. S-8.
7. FOR ADDITIONAL ABUTMENT DETAILS, SEE SHEET NOS. S-9.
8. FOR WING WALL DETAILS, SEE SHEET NOS. S-11 AND S-12.
9. FOR SHEET PILE CAP DETAILS, SEE SHEET NO. S-13.

NOTE:

THE COST OF THE CLOSURE POURS SHALL BE INCIDENTAL TO THE "SUBSTRUCTURE CONCRETE" ITEM.

PRECAST OPTION | S-10

REVISIONS

1 RED LINE NO. 1
CHANGED THE PILE OPENING 02/23/09 GLYNIS

STATE OF MARYLAND
DEPARTMENT OF TRANSPORTATION
STATE HIGHWAY ADMINISTRATION
OFFICE OF BRIDGE DEVELOPMENT

PRESTRESSED CONCRETE SLAB PANEL
BRIDGE NO. 19005
ON MD 362 (MOUNT VERNON ROAD)
OVER MONIE CREEK
ABUTMENT DETAILS II

SCALE	AS SHOWN	DATE	OCT., 2008
CONTRACT	SO4215180		

DESIGNED BY W.N.P.
DRAWN BY GLYNIS
CHECKED BY JCN

E.S.F.
10-14-08

SHEET NO. 23 OF 50

OTHER CONTRACTS FOR THIS STRUCTURE

STRUCTURE INVENTORY NO. 1900500

SURVEY BOOK NO. 31496

S:\CADD\OBD\1900500\023_19005abutdetII.dgn
PRINT DATE: Tuesday, October 06, 2009 at 7:59:30 AM

INDEXED

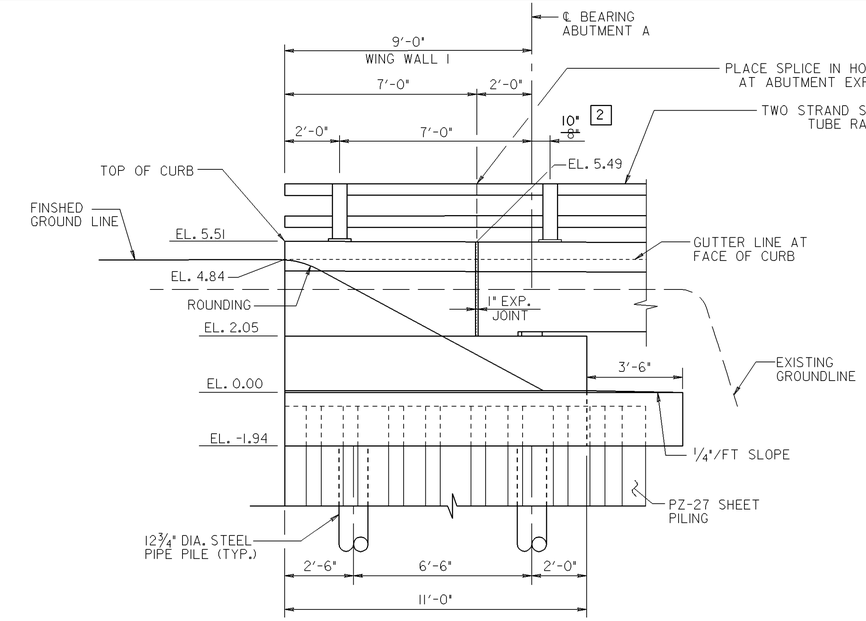

WING WALL I – ELEVATION

SCALE: 3/8"=1'-0"

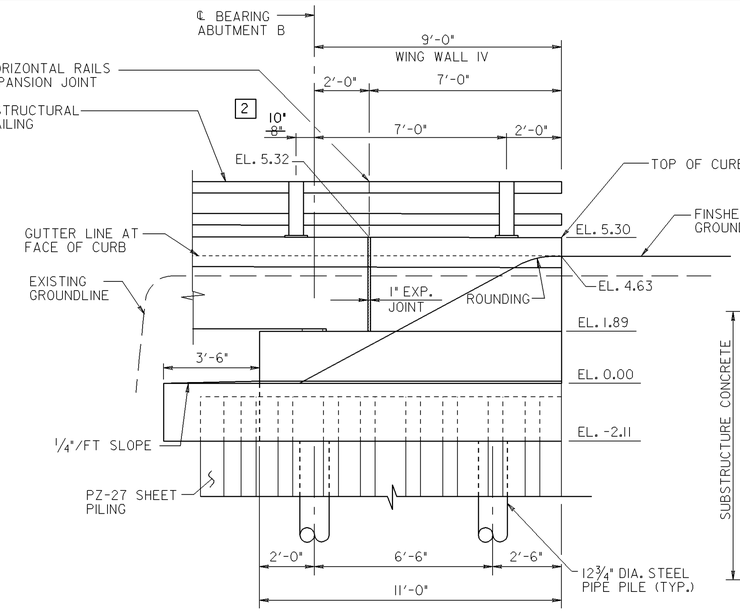

WING WALL IV – ELEVATION

SCALE: 3/8"=1'-0"

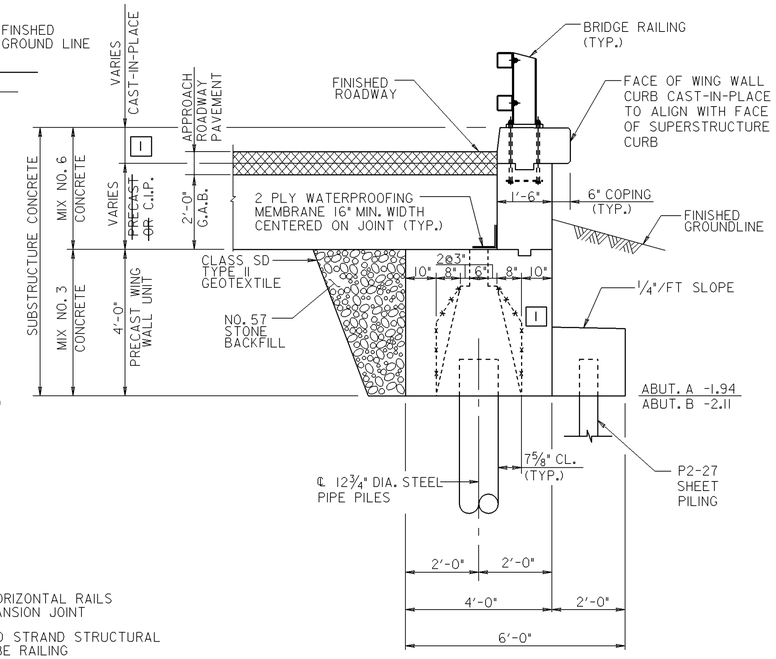

WING WALL – SECTION E-E

SCALE: 1/2" = 1'-0"

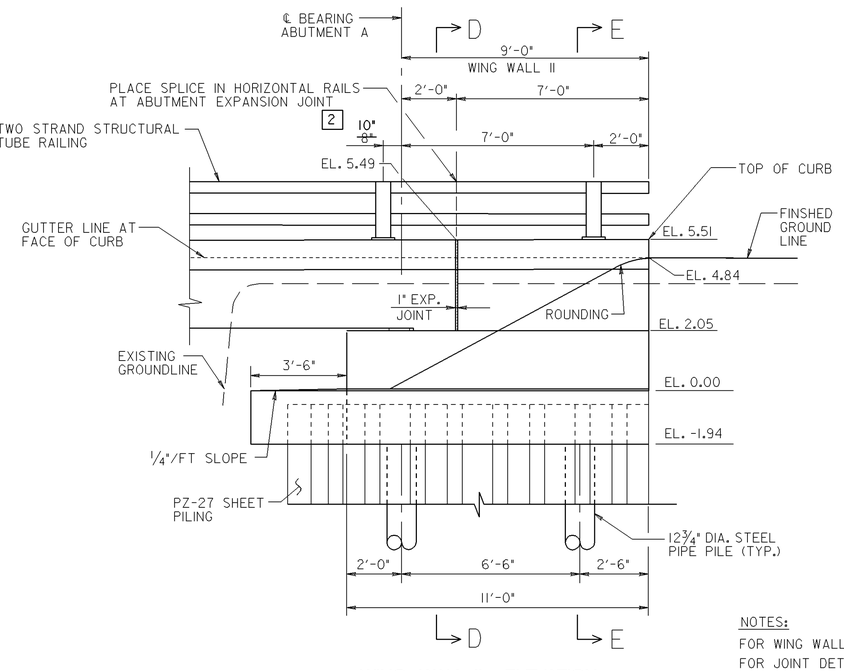

WING WALL II – ELEVATION

SCALE: 3/8"=1'-0"

NOTE:

APPROACH THRIE BEAM TRAFFIC BARRIER NOT SHOWN FOR CLARITY.

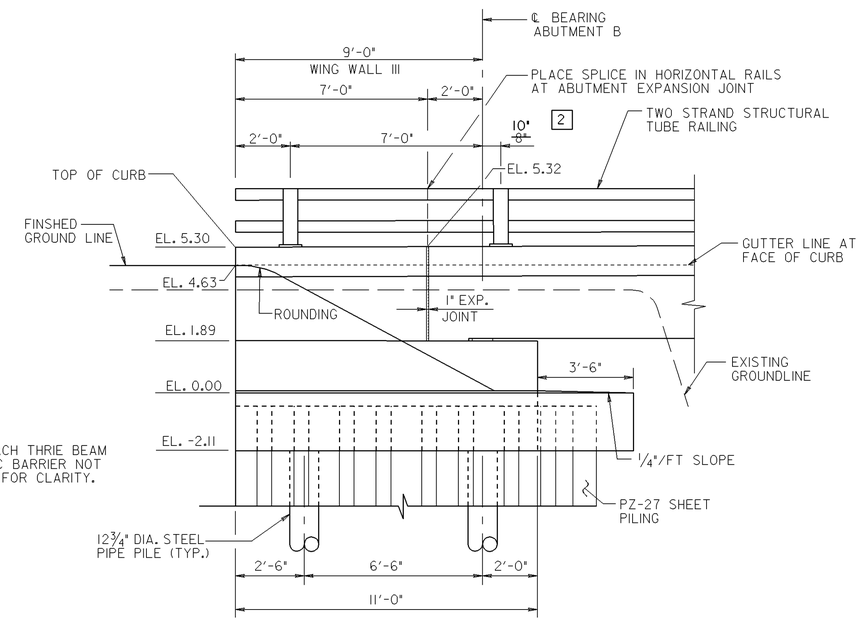

WING WALL III – ELEVATION

SCALE: 3/8"=1'-0"

NOTES:

FOR WING WALL DETAILS, SEE SHEET NO. S-12.
FOR JOINT DETAILS, SEE SHEET NO. S-27.
FOR GENERAL PLAN AND ELEVATION, SEE SHEET NO. S-1.
FOR ABUTMENT DETAILS, SEE SHEET NOS. S-9 AND S-10.
FOR RAILING DETAILS, SEE SHEET NO. S-29.
FOR SHEET PILING DETAILS, SEE SHEET NO. S-13.

FOR ADDITIONAL INFORMATION ON THE PRECAST OPTIONS SEE SHEET NO. S-4.

PRECAST OPTION | S-11

REVISIONS

1 RED LINE NO. 1
MODIFIED SECTION E-E TO A PYRAMID SHAPED PILE OPENING. 02/23/09
GLYNIS

2 RED LINE NO. 2
MODIFIED RAIL POST SPACING.
GLYNIS

STATE OF MARYLAND
DEPARTMENT OF TRANSPORTATION
STATE HIGHWAY ADMINISTRATION
OFFICE OF BRIDGE DEVELOPMENT

PRESTRESSED CONCRETE SLAB PANEL
BRIDGE NO. 19005
ON MD 362 (MOUNT VERNON ROAD)
OVER MONIE CREEK
WING WALL ELEVATIONS

SCALE AS SHOWN | DATE OCT., 2008 | CONTRACT SO4215180

DESIGNED BY W.N.P.
DRAWN BY W.N.P., GLYNIS
CHECKED BY JCN

E.S.F.
10-14-08

SHEET NO. 24 OF 50

OTHER CONTRACTS FOR THIS STRUCTURE

STRUCTURE INVENTORY NO. 1900500

SURVEY BOOK NO. 31496

S:\CADD\OBD\1900500\024_19005wwe.dgn
PRINT DATE: Tuesday, October 06, 2009 at 8:00:18 AM

INDEXED

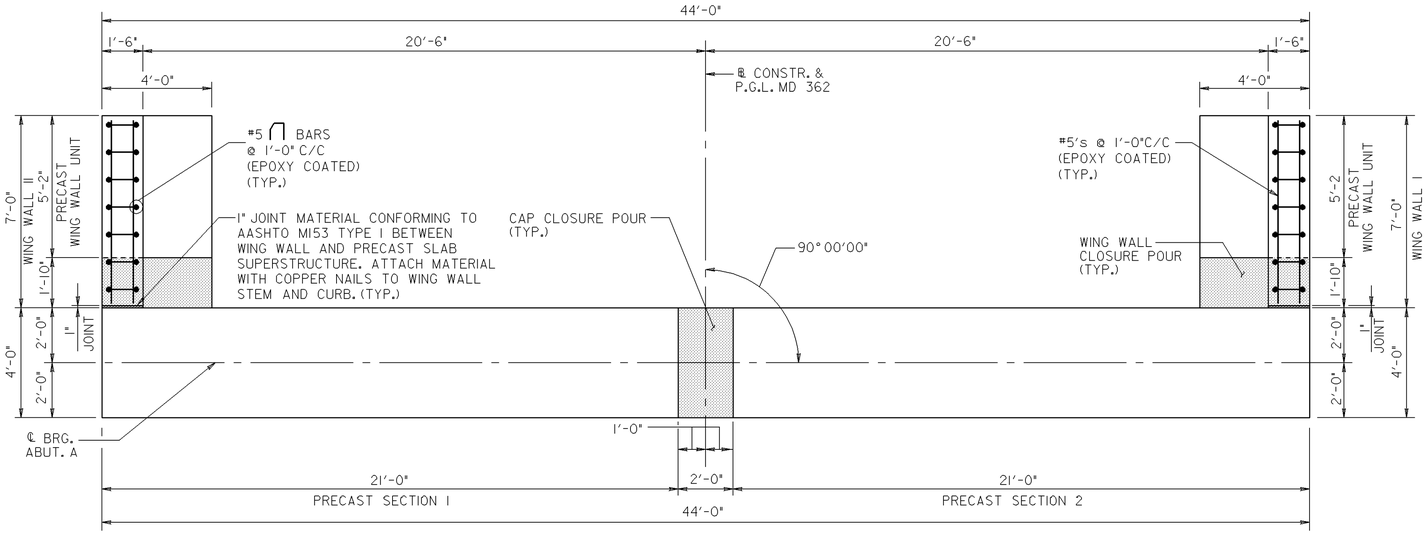

ABUTMENT – PLAN ABOVE BRIDGE SEAT

SCALE: 3/8" = 1'-0"

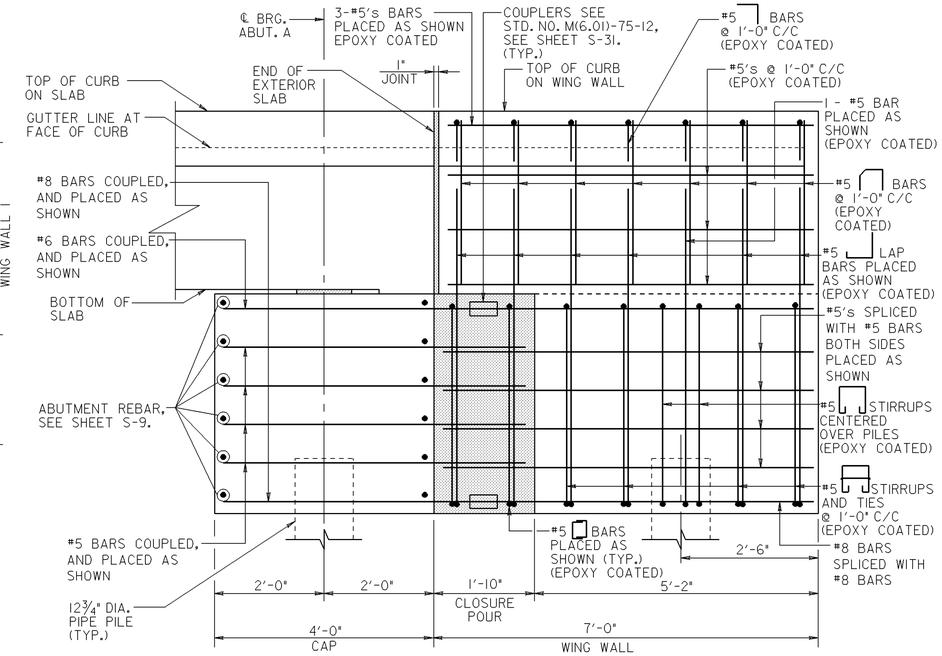

WING WALL CLOSURE POUR DETAIL–ELEVATION

SCALE: 3/4" = 1'-0"

NOTE:

PLACE WING WALL CURB TO MATCH SUPERSTRUCTURE CURB.

NOTE:

ALL CONCRETE, DRAINAGE PIPES, #57 STONE, GEOTEXTILE, AND REINFORCING STEEL WITHIN THE ABUTMENTS, WING WALLS, AND SHEET PILE CAPS WILL NOT BE MEASURED FOR PAYMENT BUT SHALL BE INCIDENTAL TO IN THE LUMP SUM "SUBSTRUCTURE CONCRETE" ITEM.

FOR ADDITIONAL INFORMATION ON THE PRECAST OPTIONS SEE SHEET NO. S-4.

NOTES:

1. FOR GENERAL PLAN AND ELEVATION, SEE SHEET NO. S-1.
2. FOR GEOMETRIC LAYOUT, SEE SHEET NO. S-3.
3. FOR PILE LAYOUT PLAN, SEE SHEET NO. S-6.
4. FOR PRECAST ABUTMENT CAP SEQUENCES OF CONSTRUCTION, SEE SHEET NO. S-4.
5. FOR ABUTMENT A PLAN AND ELEVATION, SEE SHEET NO. S-7.
6. FOR ABUTMENT B PLAN AND ELEVATION, SEE SHEET NO. S-8.
7. FOR WING WALL ELEVATIONS, SEE SHEET NO. S-11.
8. FOR ABUTMENT DETAILS, SEE SHEET NOS. S-9 & S-10.
9. FOR SHEET PILE CAP DETAILS, SEE SHEET NO. S-13.

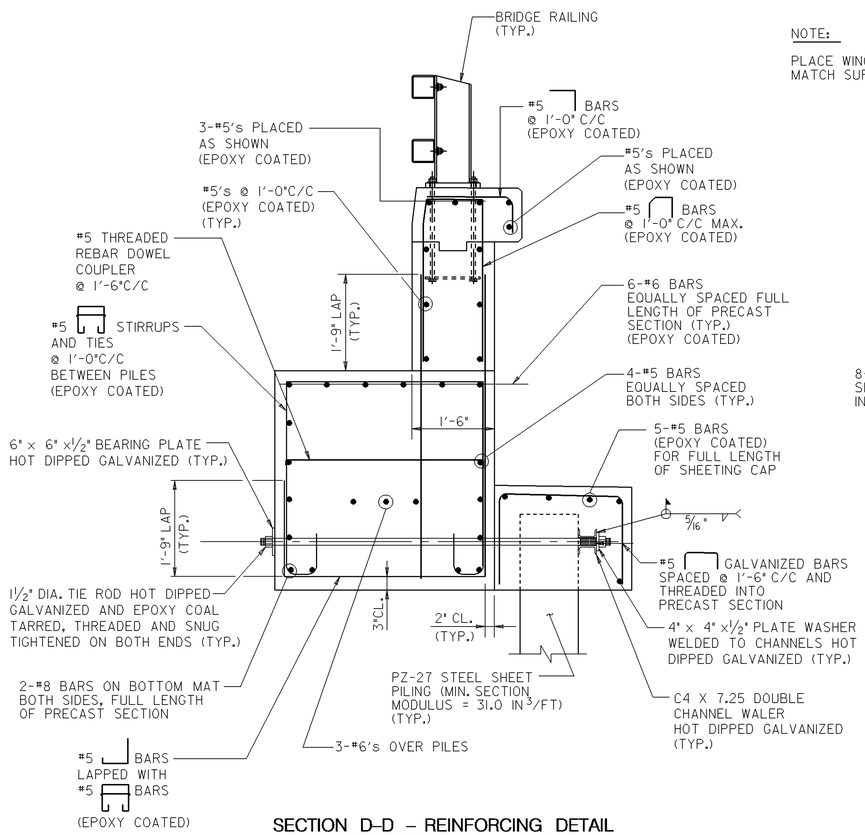

SECTION D–D – REINFORCING DETAIL

SCALE: 3/4" = 1'-0"

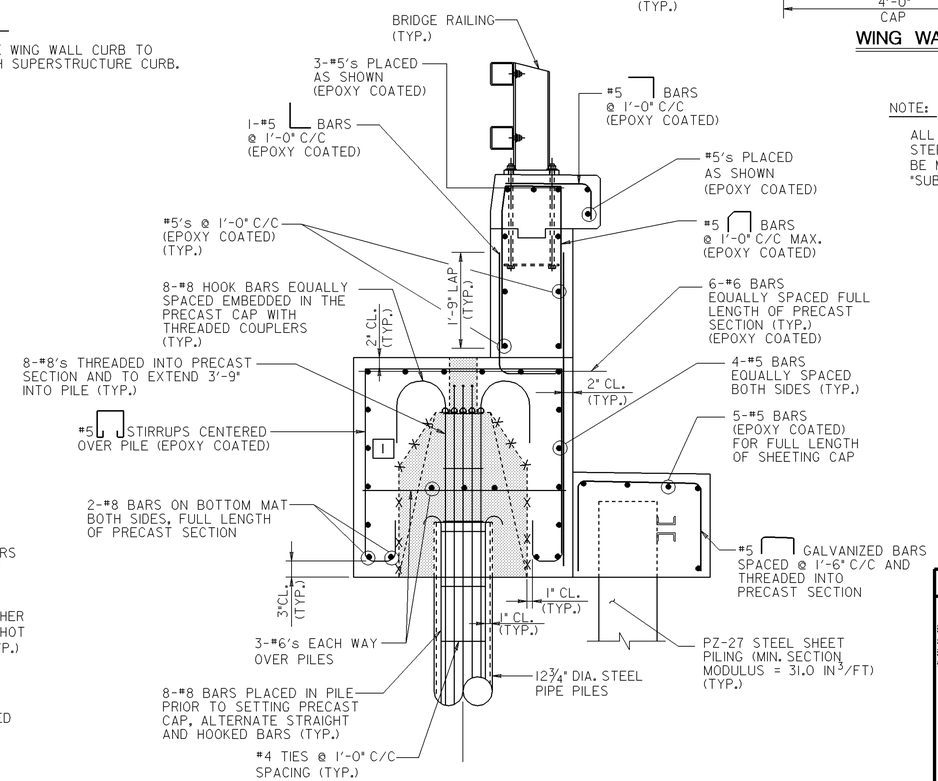

SECTION E–E – REINFORCING DETAIL

SCALE: 3/4" = 1'-0"

PRECAST OPTION | S-12

REVISIONS
1 RED LINE NO. 1 MODIFIED SECTION E-E TO SHOW PYRAMID OPENING FOR PILE. 02/23/09 GLYNIS

STATE OF MARYLAND
DEPARTMENT OF TRANSPORTATION
STATE HIGHWAY ADMINISTRATION
OFFICE OF BRIDGE DEVELOPMENT

PRESTRESSED CONCRETE SLAB PANEL
BRIDGE NO. 19005
ON MD 362 (MOUNT VERNON ROAD)
OVER MONIE CREEK
WING WALL DETAILS

SCALE AS SHOWN DATE OCT., 2008 CONTRACT SO4215180

DESIGNED BY W.N.P.
DRAWN BY W.N.P., GLYNIS
CHECKED BY JCN

E.S.F.
10-14-08

SHEET NO. 25 OF 50

INDEXED

OTHER CONTRACTS FOR THIS STRUCTURE

STRUCTURE INVENTORY NO. 1900500

SURVEY BOOK NO. 31496

S:\CADD\OBD\1900500\025_19005wwdet.dgn
PRINT DATE: Tuesday, October 06, 2009 at 8:00:43 AM

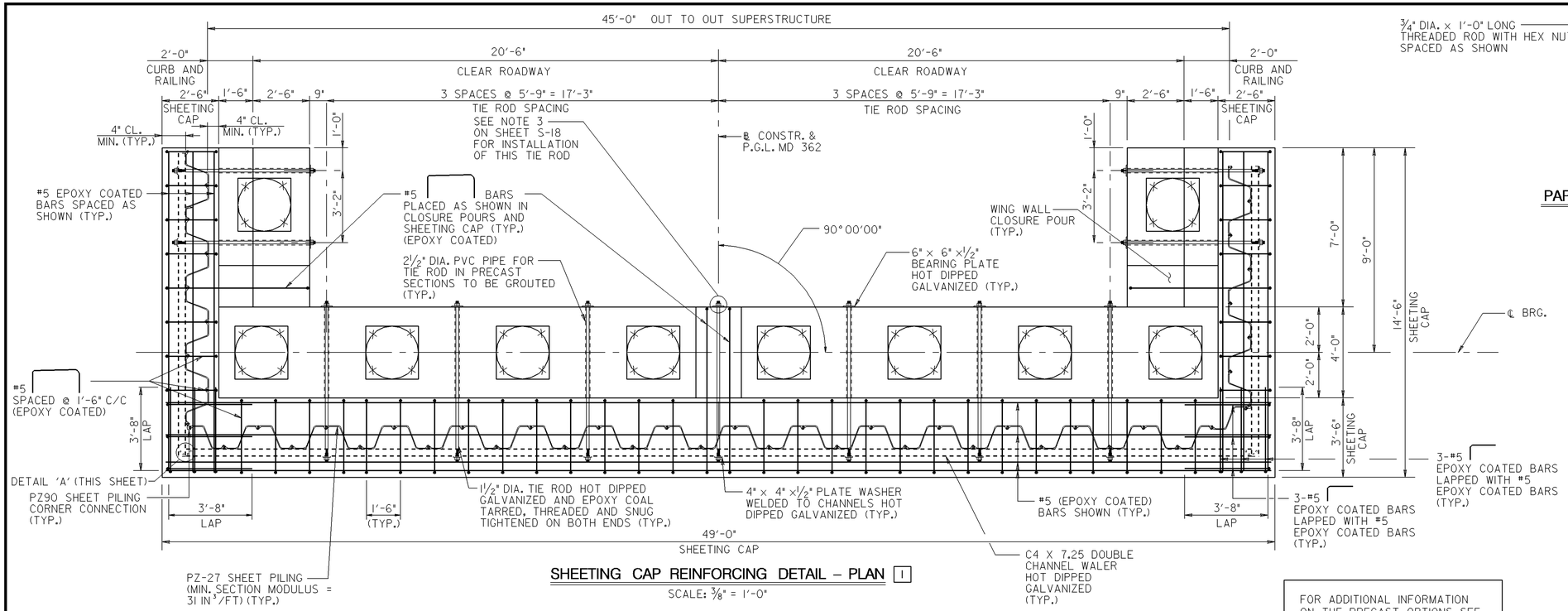

SHEETING CAP REINFORCING DETAIL – PLAN 1

SCALE: 3/8" = 1'-0"

FOR ADDITIONAL INFORMATION ON THE PRECAST OPTIONS SEE SHEET NO. S-4.

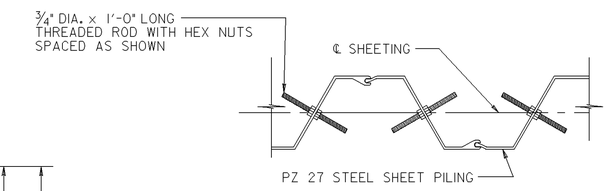

PARTIAL STEEL SHEETING PILING PLAN VIEW

SCALE: 1" = 1'-0"

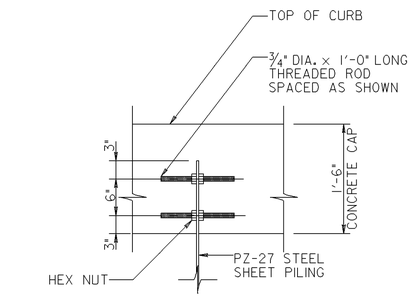

THREADED ROD CONNECTION SECTION

SCALE: 1" = 1'-0"

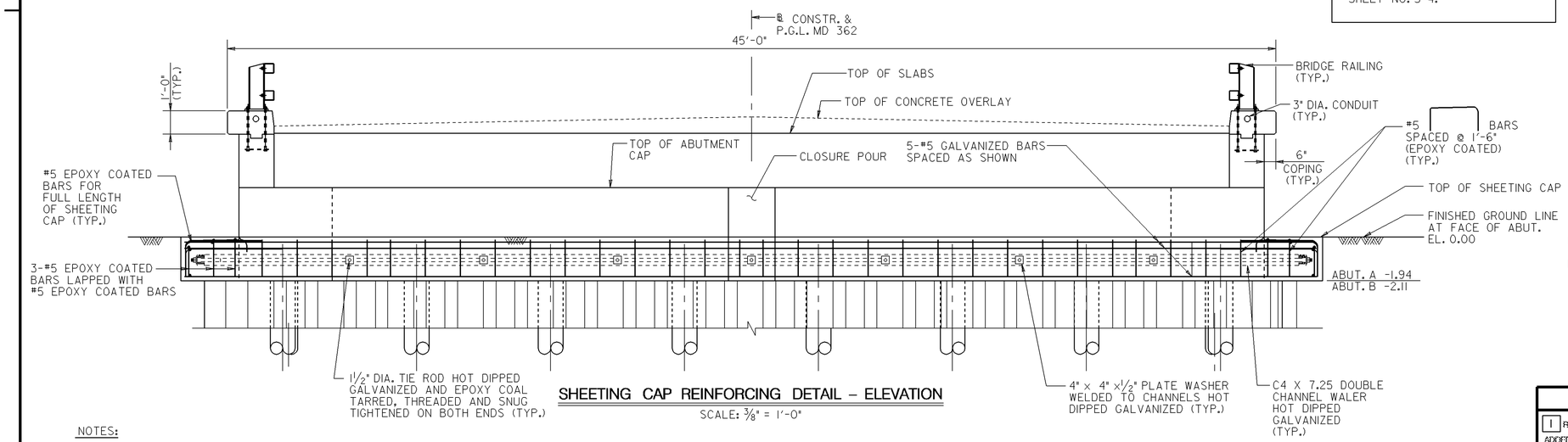

SHEETING CAP REINFORCING DETAIL – ELEVATION

SCALE: 3/8" = 1'-0"

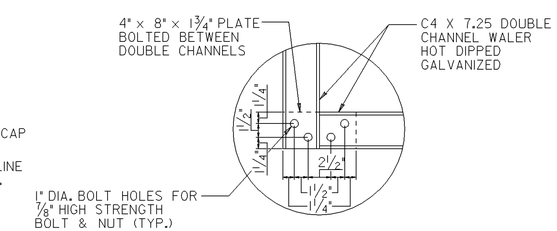

DETAIL 'A' – WALER CONNECTION DETAIL

SCALE: 1 1/2" = 1'-0"

NOTES:

1. REINFORCING STEEL IN ABUTMENT NOT SHOWN FOR CLARITY. FOR ABUTMENT REINFORCEMENT DETAILS, SEE SHEETS NOS. S-9 AND S-10.
2. THE CONTRACTOR SHALL HAVE THE OPTION TO USE A DIFFERENT STEEL SHEETING TYPE THAT SATISFIES THE MINIMUM SECTION MODULUS PROVIDED BY THE PZ 27 SHEETNG SHOWN ON THE PLANS. NO OPTION WILL BE CONSIDERED WITH A SHEETING WALL THICKNESS LESS THAN 7/8". IF THE CONTRATOR SELECTS A DEEPER SECTION, THE MINIMUM CLEARANCES MUST BE MAINTAINED. NO ADDITIONAL COST SHALL BE GIVEN REGARDLESS OF THE SHEETING OPTION SELECTED. THE CONTRACTOR SHALL HAVE THE RESPONSIBILITY TO LAYOUT THE SHEETING TO ENSURE THAT ALL SECTIONS TIGHTLY CONNECT TOGETHER. ALL CONNECTORS, INCLUDING AT THE SHEETING CORNERS, NECESSARY TO PROVIDE TIGHT CONNECTIONS, SHALL BE INCIDENTAL TO THE COST OF THE "STEEL SHEET PILING" ITEM.
3. THREADED RODS ON THE SHEET PILING IN THE SHEET PILE CAP SHALL BE INCIDENTAL TO THE COST OF THE "STEEL SHEET PILING" ITEM. NO ADDITIONAL COMPENSATION SHALL BE GIVEN, BASED ON THE SELECTION OF OPTIONS.

NOTES:

1. FOR GENERAL PLAN AND ELEVATION, SEE SHEET NO. S-1.
2. FOR GEOMETRIC LAYOUT, SEE SHEET NO. S-3.
3. FOR PILE LAYOUT PLAN, SEE SHEET NO. S-6.
4. FOR PRECAST ABUTMENT CAP SEQUENCES OF CONSTRUCTION, SEE SHEET NO. S-4.
5. FOR ABUTMENT A PLAN AND ELEVATION, SEE SHEET NO. S-7.
6. FOR ABUTMENT B PLAN AND ELEVATION, SEE SHEET NO. S-8.
7. FOR ADDITIONAL ABUTMENT DETAILS, SEE SHEET NOS. S-9 & S-10.
8. FOR WING WALL DETAILS, SEE SHEET NOS. S-11 AND S-12.

PRECAST OPTION | S-13

REVISIONS

1 RED LINE NO. 1
ADDED TIE ROD DIMENSIONS AND CHANGED PILE OPENING.
02 /23 /09 GLYNIS

STATE OF MARYLAND
DEPARTMENT OF TRANSPORTATION
STATE HIGHWAY ADMINISTRATION
OFFICE OF BRIDGE DEVELOPMENT

PRESTRESSED CONCRETE SLAB PANEL
BRIDGE NO. 19005
ON MD 362 (MOUNT VERNON ROAD)
OVER MONIE CREEK
SHEET PILE CAP DETAILS

SCALE	AS SHOWN	DATE	OCT., 2008	CONTRACT	SO4215180
DESIGNED BY	W.N.P.				
DRAWN BY	W.N.P., GLYNIS				
CHECKED BY	JCN				

E.S.F.
10-14-08

SHEET NO. 26 OF 50

INDEXED

OTHER CONTRACTS FOR THIS STRUCTURE

STRUCTURE INVENTORY NO. 1900500

SURVEY BOOK NO. 31496

S:\CADD\OBD\1900500\026_19005spc.dgn
PRINT DATE: Tuesday, October 06, 2009 at 8:01:25 AM

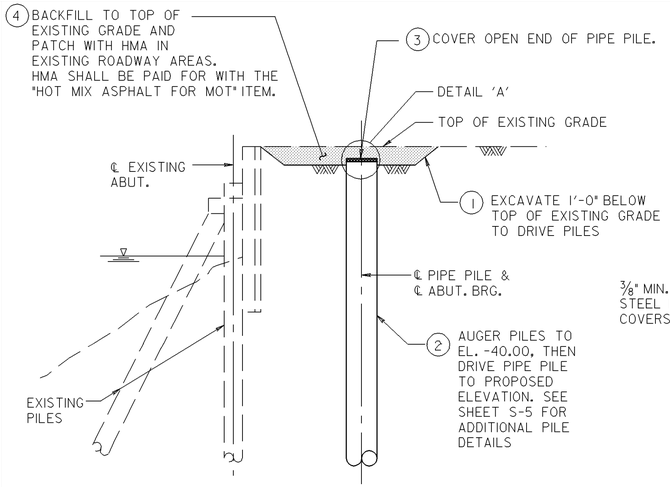

SECTION
SCALE: 1/4" = 1'-0"

STEP 1 (PRIOR TO 5 WEEK CLOSURE PERIOD)
USING LANE CLOSURES, DRIVE ALL PIPE PILES

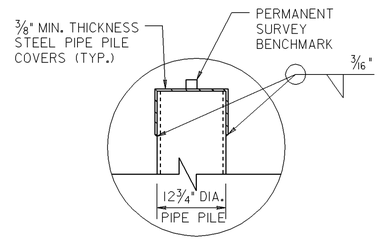

DETAIL 'A'
SCALE: 1" = 1'-0"

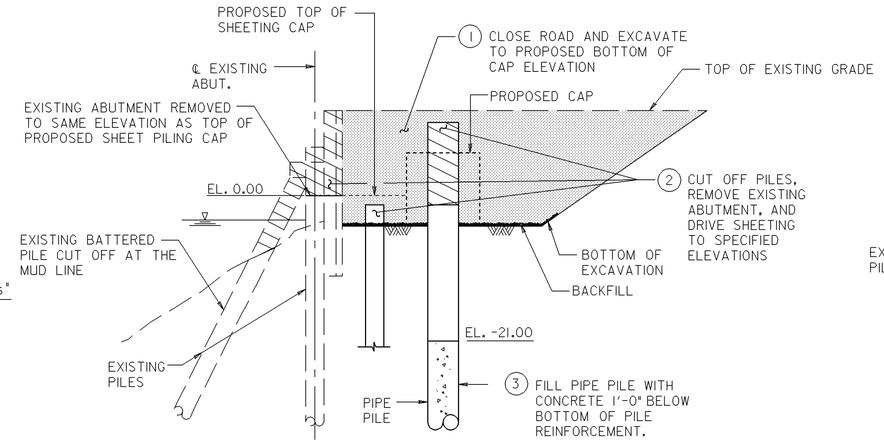

SECTION
SCALE: 1/4" = 1'-0"

STEP 2 (DURING 5 WEEK CLOSURE PERIOD)
EXCAVATE BENCH TO PROPOSED BOTTOM OF CAP ELEVATION AND CUT OFF PILES AND EXISTING ABUTMENT AND DRIVE SHEET PILING

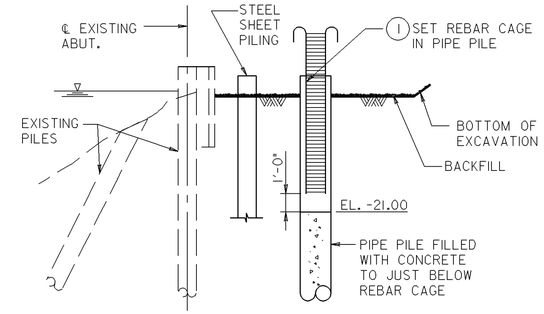

SECTION
SCALE: 1/4" = 1'-0"

STEP 3
PLACE PILE REINFORCEMENT

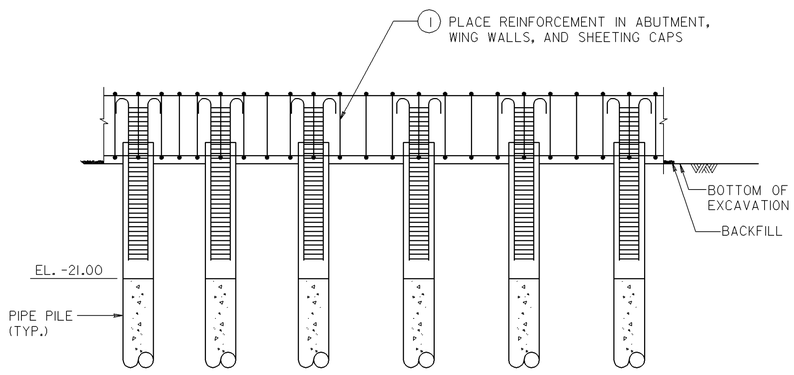

NOTE:

EXISTING ABUTMENT AND SHEET PILING NOT SHOWN FOR CLARITY.

ELEVATION
SCALE: 1/4" = 1'-0"

STEP 4
PLACE CAP REINFORCEMENT

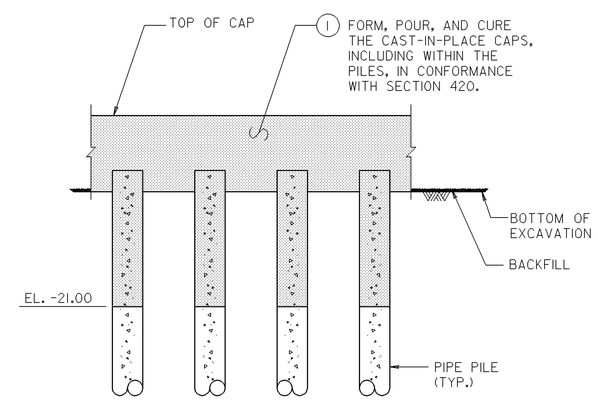

ELEVATION
SCALE: 1/4" = 1'-0"

NOTE:

EXISTING ABUTMENT AND SHEET PILING NOT SHOWN FOR CLARITY.

STEP 5
POUR, FORM AND CURE CONCRETE ABUTMENT, WING WALL AND SHEETING CAPS

FOR ADDITIONAL INFORMATION ON THE CAST-IN-PLACE OPTIONS SEE SHEET NO. S-4.

NOTES:

FOR GENERAL PLAN AND ELEVATION, SEE SHEET NO. S-1.
FOR ABUTMENT A PLAN AND ELEVATION, SEE SHEET NO. S-16.
FOR ABUTMENT B PLAN AND ELEVATION, SEE SHEET NO. S-17.
FOR PILE LAYOUT PLAN, SEE SHEET NO. S-15.

CAST-IN-PLACE OPTION | S-14

REVISIONS

STATE OF MARYLAND
DEPARTMENT OF TRANSPORTATION
STATE HIGHWAY ADMINISTRATION
OFFICE OF BRIDGE DEVELOPMENT

PRESTRESSED CONCRETE SLAB PANEL
BRIDGE NO. 19005
ON MD 362 (MOUNT VERNON ROAD)
OVER MONIE CREEK
C.I.P. ABUTMENT CAP – SEQ. OF CONSTRUCTION

SCALE AS SHOWN | DATE OCT., 2008 | CONTRACT SO4215180

DESIGNED BY W.N.P.
DRAWN BY GLYNIS
CHECKED BY JCN

E.S.F.
10-14-08

SHEET NO. 27 OF 50

OTHER CONTRACTS FOR THIS STRUCTURE

STRUCTURE INVENTORY NO. 1900500
SURVEY BOOK NO. 31496

S:\CADD\OBD\1900500\027_19005AbutcapseqCIP.dgn
PRINT DATE: Tuesday, October 06, 2009 at 8:03:55 AM

INDEXED

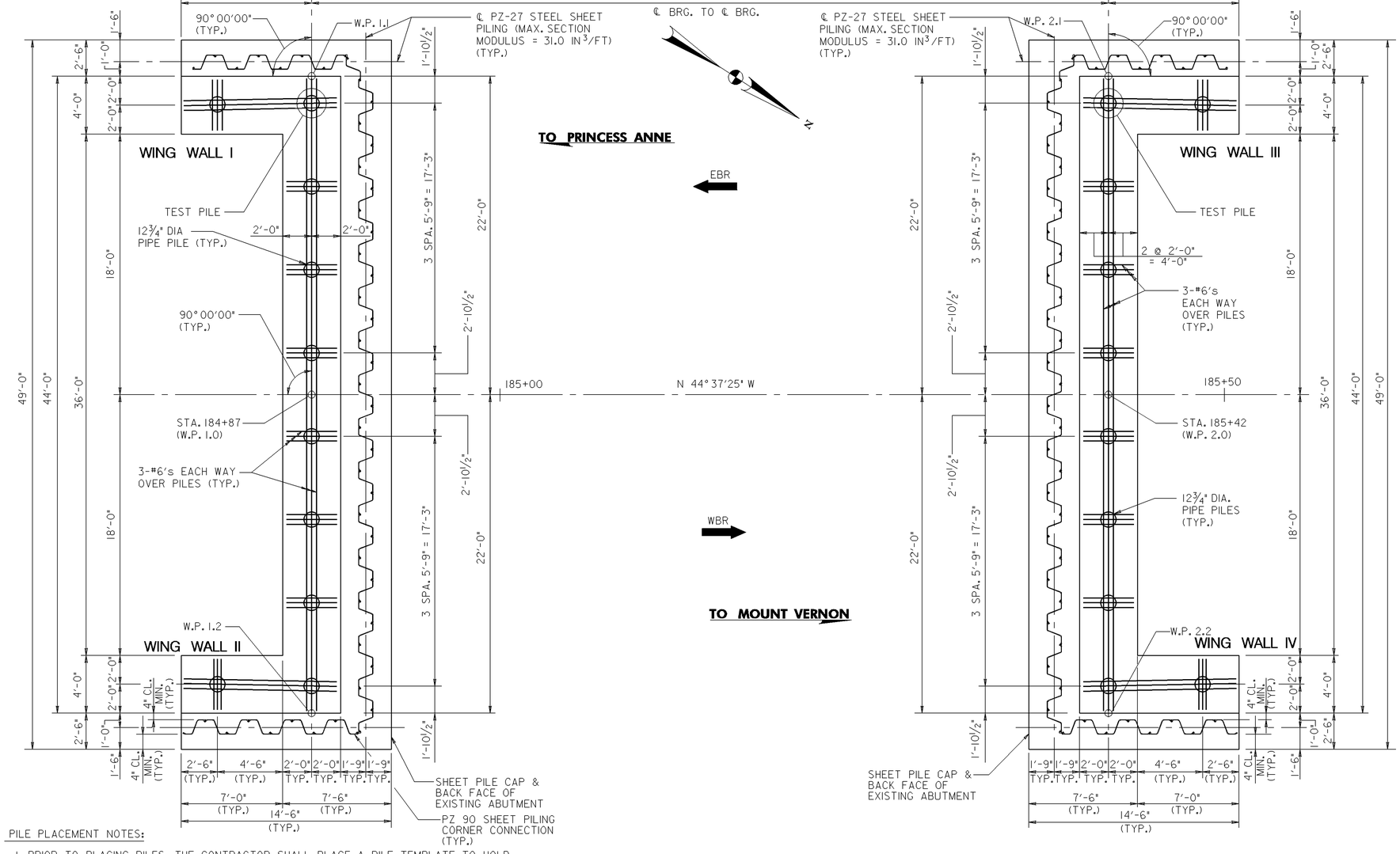

PLAN

SCALE: 1/4" = 1'-0"

PILE DRIVING INFORMATION

PILE SIZE AND TYPE: 12¾" DIA. STEEL PIPE PILE (CLOSED ENDED)	
REQUIRED PILE HAMMER ENERGY:	
ACTUAL BEARING OBTAINED:	
HAMMER TYPE:	
REQUIRED BLOWS/FT.:	
ACTUAL PILE HAMMER ENERGY:	
SPECIAL DRIVING CONDITIONS AND COMMENTS:	

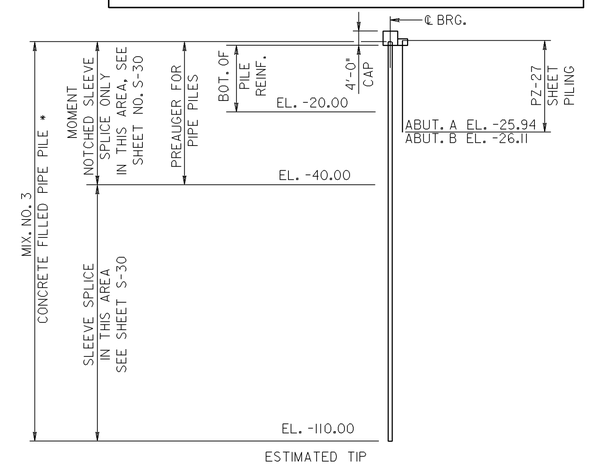

PILE – ELEVATION

SCALE: 1" = 20'-0"

NOTES:

1. ALL PILES TO BE 12¾" DIA. CLOSED ENDED CONCRETE FILLED STEEL PIPE PILING WITH A MINIMUM WALL THICKNESS OF ½" DRIVEN TO A MINIMUM SAFE BEARING CAPACITY OF 120 TONS (DESIGN LOAD 100 TONS). NO PILES WITH A WALL THICKNESS OF LESS THAN ½" WILL BE ACCEPTED.
2. ALL PILES SHALL BE PLUMB.
3. THE MINIMUM SAFE BEARING VALUE AND MINIMUM PENETRATION ELEVATION SHOWN ON THESE PLANS MUST BE ACHIEVED FOR EACH PILE. IF THE ESTIMATED TIP ELEVATION IS NOT REACHED OR EXCEEDED WHILE ACHIEVING THE MINIMUM SAFE BEARING VALUE AND THE MINIMUM PENETRATION ELEVATION; THE PILE WILL BE CONSIDERED SATISFACTORY.
4. SHOP PLANS SHALL SHOW HOW REBARS ARE TO BE TIED AS WELL AS HOW THEY WILL BE HELD IN PLACE ABOVE PILING WHILE POUR IS BEING MADE.
5. FOR ADDITIONAL ABUTMENT AND WING WALL DETAILS, SEE SHEET NOS. S-16 THRU S-21.
6. FOR ADDITIONAL SHEET PILING DETAILS, SEE SHEET NO. S-22.
7. FOR BORING AND DRIVE TESTS, SEE SHEET NO. S-35.
8. FOR ADDITIONAL REBAR DETAILS, SEE SHEET NOS. S-31 THRU S-34.

PILE PLACEMENT NOTES:

1. PRIOR TO PLACING PILES, THE CONTRACTOR SHALL PLACE A PILE TEMPLATE TO HOLD THE PILES TRUE AND ACCURATE.
2. ALL PILES SHALL BE DRIVEN CLOSED ENDED TO THE REQUIRED DEPTHS AND BEARING CAPACITY. SEE STANDARD ON SHEET S-30 FOR PILE POINT FOR PIPE PILE DETAILS.
3. MIX. NO. 3 CONCRETE SHALL BE PLACED IN THE PILE THE FULL HEIGHT OF THE PILE.
4. NOTCHED SLEEVE SPLICE MATERIAL SHALL BE A 709, GRADE 50.
5. ALL SPLICE SLEEVES SHALL BE SHOP FABRICATED.
6. COST OF PILE SPLICES, REBAR, STEEL PLATES FOR PILE TIPS, AND PREAUGERING SHALL BE INCIDENTAL TO THE PERTINENT PILE ITEM.
7. THE CONTRACTOR SHALL HAVE THE OPTION TO USE A DIFFERENT STEEL SHEETING TYPE THAT SATISFIES THE MINIMUM SECTION MODULUS PROVIDED BY THE PZ 27 SHEETNG SHOWN ON THE PLANS. NO OPTION WILL BE CONSIDERED WITH A SHEETING WALL THICKNESS LESS THAN ⅜". IF THE CONSTRACTOR SELECTS A DEEPER SECTION, THE MINIMUM CLEARANCES MUST BE MAINTAINED. NO ADDITIONAL COST SHALL BE GIVEN REGARDLESS OF THE SHEETING OPTION SELECTED. THE CONTRACTOR SHALL HAVE THE RESPONSIBILITY TO LAYOUT THE SHEETING TO ENSURE THAT ALL SECTIONS TIGHTLY CONNECT TOGETHER. ALL CONNECTORS, INCLUDING AT THE SHEETING CORNERS, NECESSARY TO PROVIDE TIGHT CONNECTIONS, SHALL BE INCIDENTAL TO THE COST OF THE "STEEL SHEET PILING" ITEM.

*8. THE COST OF CONCRETE WITHIN THE PILE SHALL BE INCIDENTAL TO THE PERTINENT PILE ITEM.

9. THE CONTRACTOR SHALL FILL BETWEEN THE PILE AND THE AUGER HOLE WITH AN APPROVED FLOWABLE BACKFILL. THE CONTRACTOR SHALL ENSURE THAT NO VOIDS REMAIN BETWEEN THE PILE AND THE AUGER HOLE.

FOR ADDITIONAL INFORMATION ON THE CAST-IN-PLACE OPTIONS SEE SHEET NO. S-4.

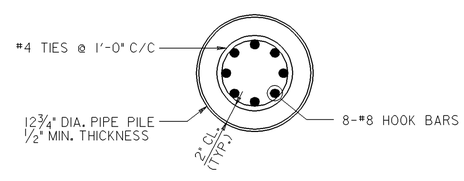

ABUTMENT PILE REINFORCEMENT SECTION

SCALE: 1½" = 1'-0"

PILE DATA

	DESIGN DATA				ACTUAL FIELD DATA	
SUBSTRUCTURE UNIT	DESIGN BEARING VALUE	MINIMUM SAFE BEARING VALUE	MIN. PENETRATION ELEVATION	ESTIMATED TIP ELEVATION	AVE. ACTUAL MIN. TIP ELEV.	AVE. ACTUAL MAX. TIP ELEV.
ABUTMENT A	100 TONS	120 TONS	-105.00	-110.00		
ABUTMENT B	100 TONS	120 TONS	-105.00	-110.00		

CAST-IN-PLACE OPTION | S-15

REVISIONS

STATE OF MARYLAND
DEPARTMENT OF TRANSPORTATION
STATE HIGHWAY ADMINISTRATION
OFFICE OF BRIDGE DEVELOPMENT

PRESTRESSED CONCRETE SLAB PANEL
BRIDGE NO. 19005
ON MD 362 (MOUNT VERNON ROAD)
OVER MONIE CREEK
PILE LAYOUT

SCALE AS SHOWN DATE OCT., 2008 CONTRACT SO4215180

DESIGNED BY W.N.P.
DRAWN BY GLYNIS, J.T.
CHECKED BY JCN
E.S.F. 10-14-08

SHEET NO. 28 OF 50

INDEXED

OTHER CONTRACTS FOR THIS STRUCTURE

STRUCTURE INVENTORY NO. 1900500

SURVEY BOOK NO. 31496

S:\CADD\OBD\1900500\028_19005plCIP.dgn
PRINT DATE: Tuesday, October 06, 2009 at 8:04:28 AM

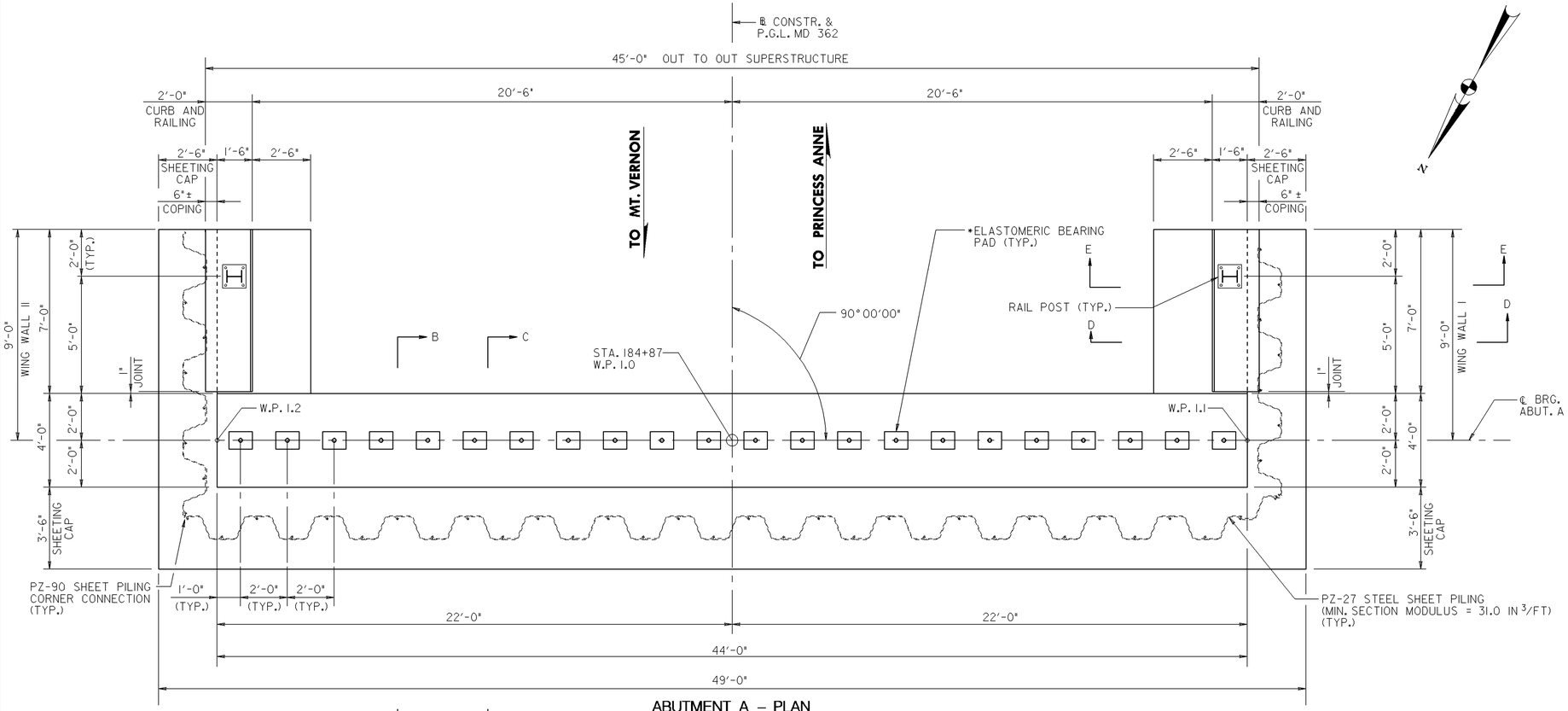

ABUTMENT A – PLAN

SCALE: 3/8" = 1'-0"

FOR ADDITIONAL INFORMATION ON THE CAST-IN-PLACE OPTIONS SEE SHEET NO. S-4.

NOTES:

*1. ALL ELASTOMERIC BEARING PADS SHALL BE PLACED WITH AN EPOXY ADHESIVE IN ACCORDANCE WITH 440.03.04. ADHESIVE SHALL BE APPLIED ON THE BOTTOM AND TOP OF PAD.

2. PILE SPACING SHOWN ON SHEET S-15.

**3. SHEETING WALERS AND TIE RODS NOT SHOWN FOR CLARITY. SEE SHEET NO. 22 FOR DETAILS.

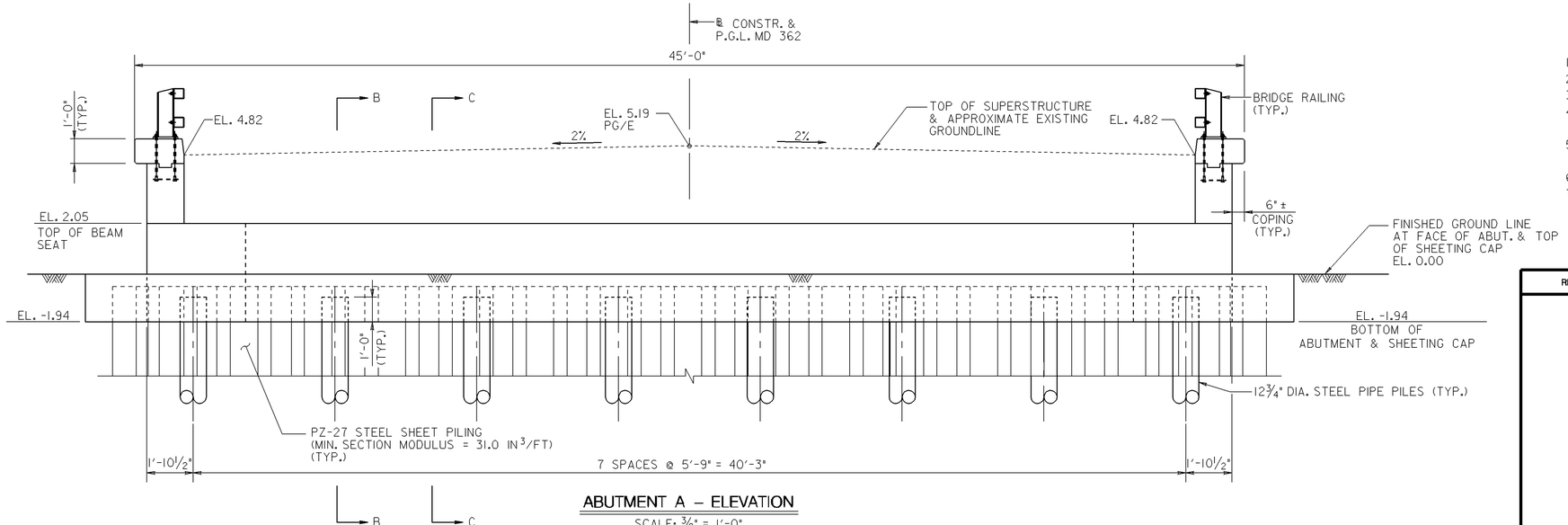

ABUTMENT A – ELEVATION

SCALE: 3/8" = 1'-0"

NOTES:

1. FOR GENERAL PLAN AND ELEVATION, SEE SHEET NO. S-1.
2. FOR GEOMETRIC LAYOUT, SEE SHEET NO. S-3.
3. FOR PILE LAYOUT PLAN, SEE SHEET NO. S-15.
4. FOR ABUTMENT DETAILS, SECTION B-B AND C-C, SEE SHEET NOS. S-18 AND S-19.
5. FOR WING WALL DETAILS, SECTION D-D AND E-E, SEE SHEET NOS. S-20 AND S-21.
6. FOR SHEET PILE CAP DETAILS, SEE SHEET NO. S-22.
7. FOR WORKING POINT LOCATIONS, SEE SHEET S-3.

CAST-IN-PLACE OPTION | S-16

REVISIONS

STATE OF MARYLAND
DEPARTMENT OF TRANSPORTATION
STATE HIGHWAY ADMINISTRATION
OFFICE OF BRIDGE DEVELOPMENT

PRESTRESSED CONCRETE SLAB PANEL
BRIDGE NO. 19005
ON MD 362 (MOUNT VERNON ROAD)
OVER MONIE CREEK
ABUTMENT A PLAN & ELEVATION

SCALE AS SHOWN | DATE OCT., 2008 | CONTRACT SO4215180

DESIGNED BY W.N.P.
DRAWN BY GLYNIS
CHECKED BY JCN
E.S.F.
10-14-08

SHEET NO. 29 OF 50

OTHER CONTRACTS FOR THIS STRUCTURE

STRUCTURE INVENTORY NO. 1900500

SURVEY BOOK NO. 31496

S:\CADD\OBD\1900500\029_19005abap&eCIP.dgn
PRINT DATE: Tuesday, October 06, 2009 at 8:05:20 AM

INDEXED

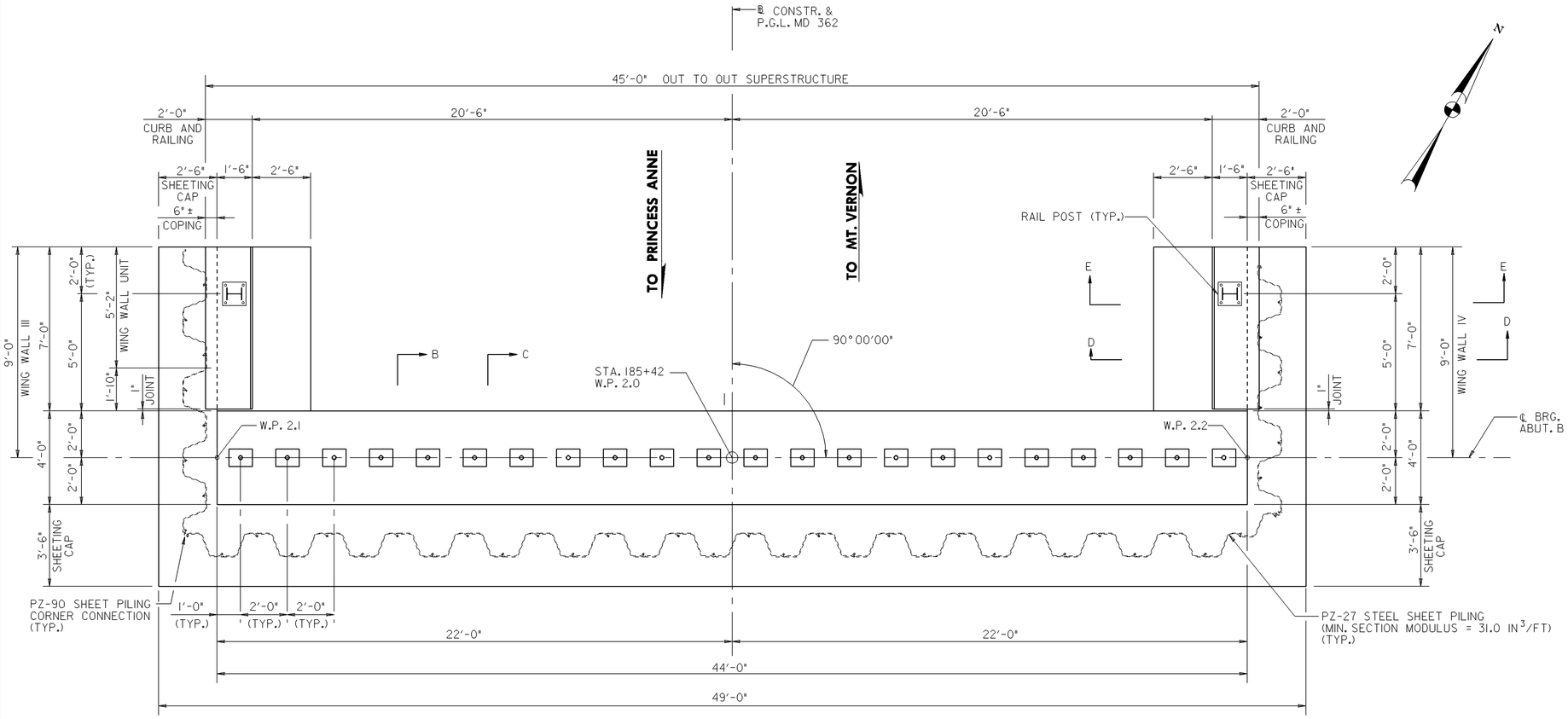

ABUTMENT B – PLAN

SCALE: 3/8" = 1'-0"

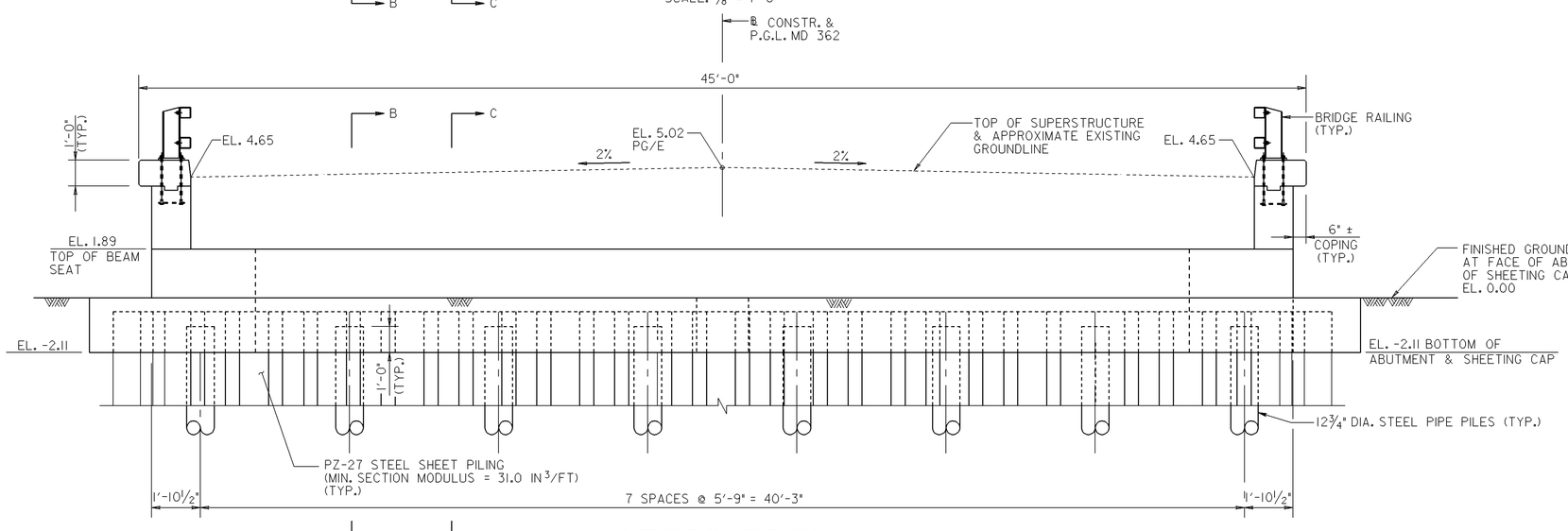

ABUTMENT B – ELEVATION

SCALE: 3/8" = 1'-0"

FOR ADDITIONAL INFORMATION ON THE CAST-IN-PLACE OPTIONS SEE SHEET NO. S-4.

NOTES:

*1. ALL ELASTOMERIC BEARING PADS SHALL BE PLACED WITH AN EPOXY ADHESIVE IN ACCORDANCE WITH 440.03.04. ADHESIVE SHALL BE APPLIED ON THE BOTTOM AND TOP OF PAD.

2. PILE SPACING SHOWN ON SHEET S-15.

**3. SHEETING WALERS AND TIE RODS NOT SHOWN FOR CLARITY. SEE SHEET NO. 22 FOR DETAILS.

NOTES:

1. FOR GENERAL PLAN AND ELEVATION, SEE SHEET NO. S-1.
2. FOR GEOMETRIC LAYOUT, SEE SHEET NO. S-3.
3. FOR PILE LAYOUT PLAN, SEE SHEET NO. S-15.
4. FOR ABUTMENT DETAILS, SECTIONS B-B AND C-C, SEE SHEET NOS. S-18 AND S-19.
5. FOR WING WALL DETAILS, SECTIONS D-D AND E-E, SEE SHEET NOS. S-20 AND S-21.
6. FOR SHEET PILE CAP DETAILS, SEE SHEET NO. S-22.
7. FOR WORKING POINT LOCATIONS, SEE SHEET S-3.

CAST-IN-PLACE OPTION | S-17

REVISIONS

STATE OF MARYLAND
DEPARTMENT OF TRANSPORTATION
STATE HIGHWAY ADMINISTRATION
OFFICE OF BRIDGE DEVELOPMENT

PRESTRESSED CONCRETE SLAB PANEL
BRIDGE NO. 19005
ON MD 362 (MOUNT VERNON ROAD)
OVER MONIE CREEK
ABUTMENT B PLAN & ELEVATION

SCALE	AS SHOWN	DATE	OCT., 2008	CONTRACT	SO4215180
DESIGNED BY	W.N.P.				
DRAWN BY	GLYNIS				
CHECKED BY	JCN				

E.S.F.
10-14-08

SHEET NO. 30 OF 50

INDEXED

OTHER CONTRACTS FOR THIS STRUCTURE

STRUCTURE INVENTORY NO. 1900500

SURVEY BOOK NO. 31496

S:\CADD\OBD\1900500\030_19005abbp&eCIP.dgn
PRINT DATE: Tuesday, October 06, 2009 at 8:05:46 AM

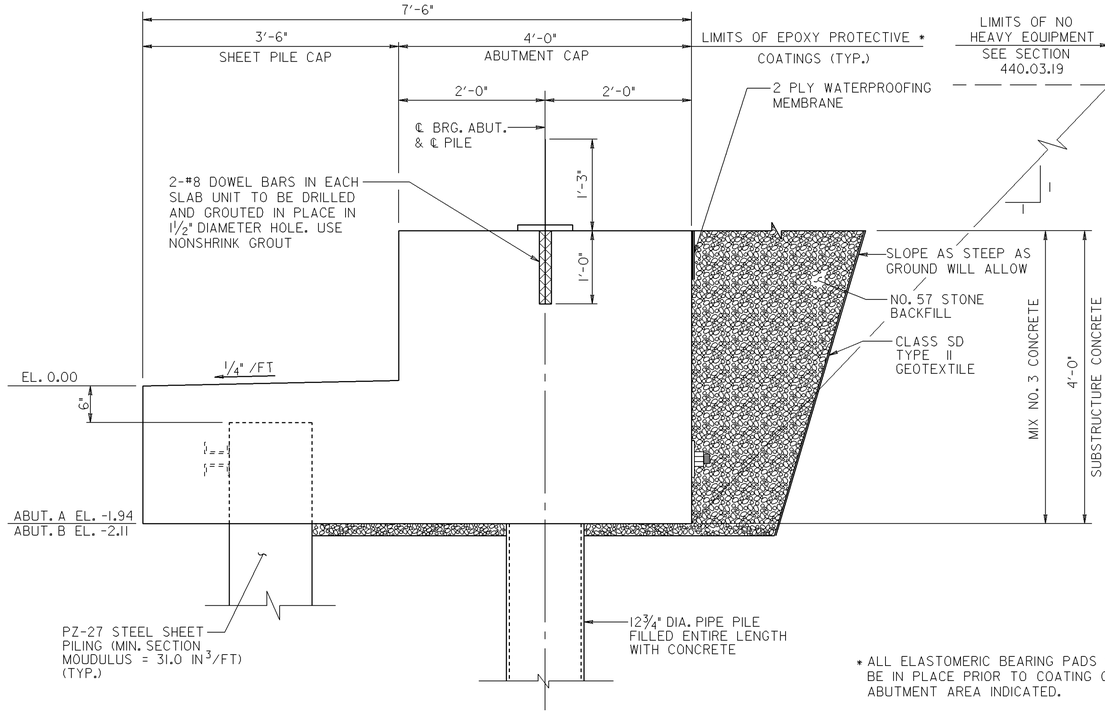

* ALL ELASTOMERIC BEARING PADS SHALL BE IN PLACE PRIOR TO COATING OF THE ABUTMENT AREA INDICATED.

SECTION B–B – TYPICAL SECTION

SCALE: 1" = 1'-0"

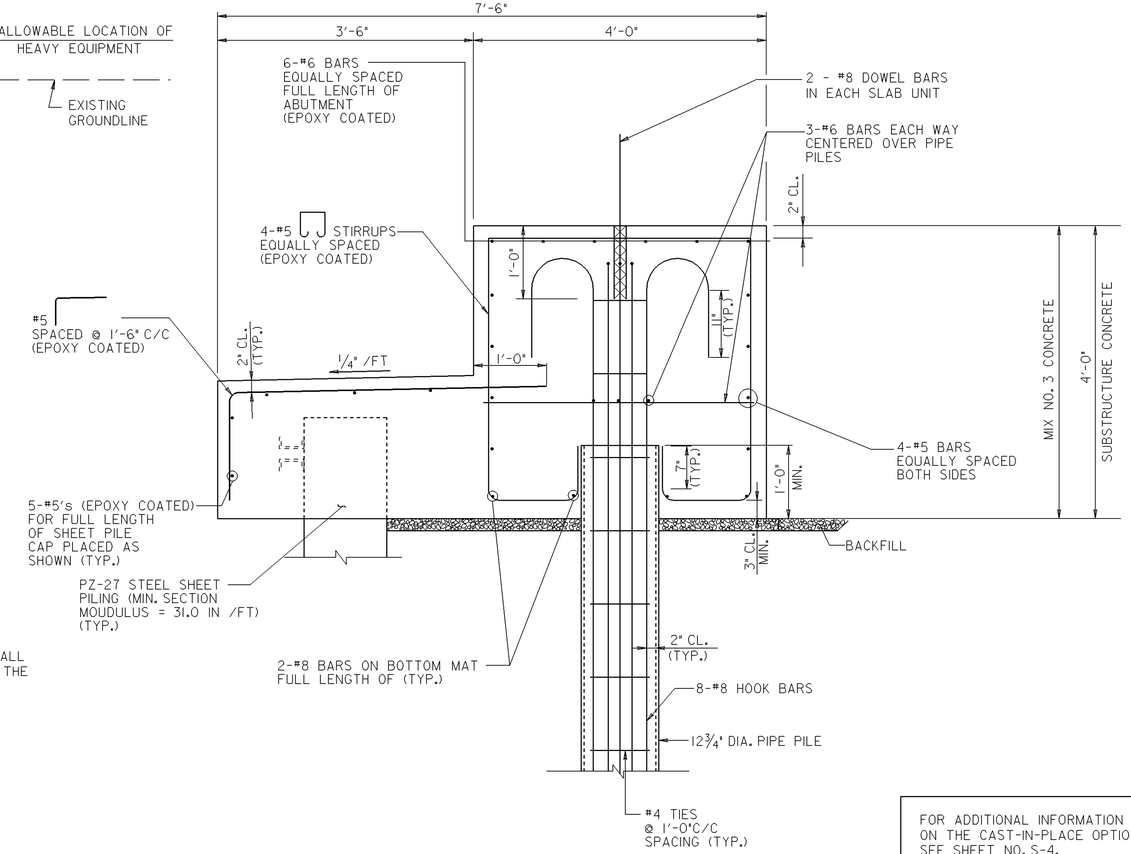

SECTION B–B – REINFORCING DETAIL @ PILE

SCALE: 1" = 1'-0"

FOR ADDITIONAL INFORMATION ON THE CAST-IN-PLACE OPTIONS SEE SHEET NO. S-4.

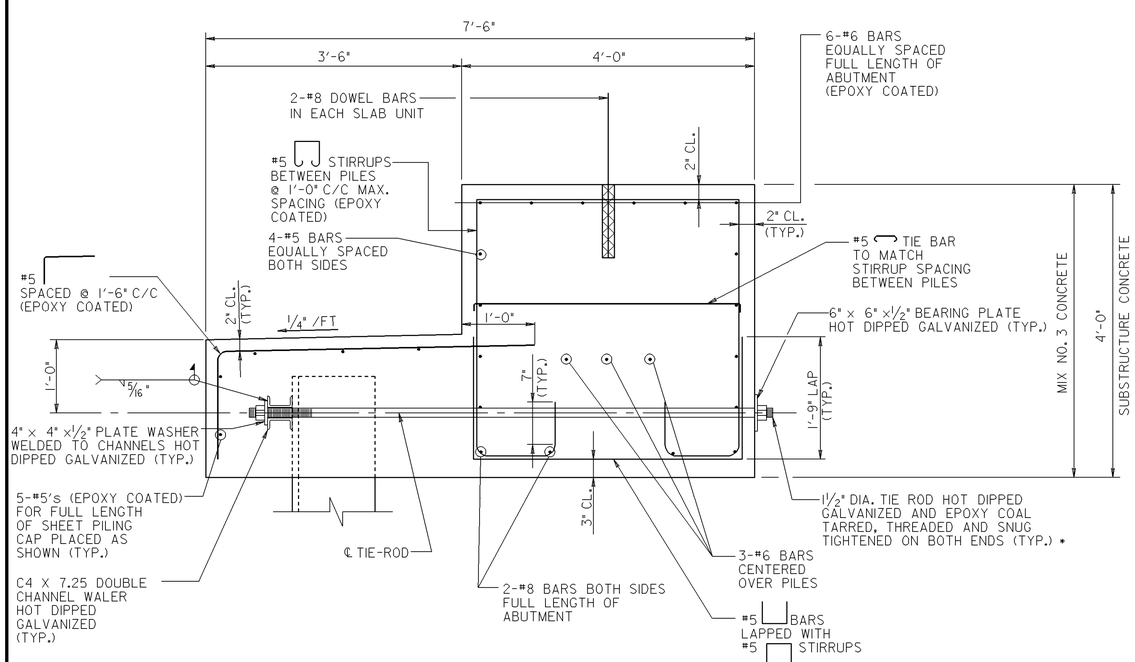

SECTION C–C – REINFORCING DETAIL

SCALE: 1" = 1'-0"

NOTES:

1. ALL REINFORCING STEEL AND CONCRETE WITHIN THE PILES FROM PILE TIP TO TOP OF PILE WILL NOT BE MEASURED FOR PAYMENT BUT SHALL BE INCIDENTAL TO THE PERTINENT PILING ITEM.
2. ALL CONCRETE, DRAINAGE PIPES, #57 STONE, GEOTEXTILE, AND REINFORCING STEEL WITHIN THE ABUTMENTS, WING WALLS, AND SHEET PILE CAPS WILL NOT BE MEASURED FOR PAYMENT BUT SHALL BE INCLUDED IN THE LUMP SUM PRICE BID ON THE "SUBSTRUCTURE CONCRETE" ITEM.

*3. THE CONTRACTOR SHALL SNUG TIGHTEN THE TIE ROD AGAINST THE FORM WORK, DURING ABUTMENT CAP POURING AND CURING. AFTER THE CAP HAS CURED, THE CONTRACTOR SHALL REMOVE THE FORM WORK AND SNUG TIGHTEN THE TIE ROD AGAINST THE CURED ABUTMENT CAP.

NOTES:

1. FOR GENERAL PLAN AND ELEVATION, SEE SHEET NO. S-1.
2. FOR GEOMETRIC LAYOUT, SEE SHEET NO. S-3.
3. FOR PILE LAYOUT PLAN AND ADDITIONAL PILE DETAILS, SEE SHEET NO. S-15.
4. FOR ABUTMENT A PLAN AND ELEVATION, SEE SHEET NO. S-16.
5. FOR ABUTMENT B PLAN AND ELEVATION, SEE SHEET NO. S-17.
6. FOR ADDITIONAL ABUTMENT DETAILS, SEE SHEET NO. S-19.
7. FOR WING WALL DETAILS, SEE SHEET NOS. S-20 AND S-21.
8. FOR SHEET PILE CAP DETAILS, SEE SHEET NO. S-22.

CAST–IN–PLACE OPTION | S-18

REVISIONS

STATE OF MARYLAND
DEPARTMENT OF TRANSPORTATION
STATE HIGHWAY ADMINISTRATION
OFFICE OF BRIDGE DEVELOPMENT

PRESTRESSED CONCRETE SLAB PANEL
BRIDGE NO. 19005
ON MD 362 (MOUNT VERNON ROAD)
OVER MONIE CREEK
ABUTMENT DETAILS I

SCALE AS SHOWN | DATE OCT., 2008 | CONTRACT SO4215180

DESIGNED BY W.N.P.
DRAWN BY GLYNIS, J.T.
CHECKED BY JCN

E.S.F.
10-14-08

SHEET NO. 31 OF 50

OTHER CONTRACTS FOR THIS STRUCTURE

STRUCTURE INVENTORY NO. 1900500

SURVEY BOOK NO. 31496

S:\CADD\OBD\1900500\031_19005abutldetCIP.dgn
PRINT DATE: Tuesday, October 06, 2009 at 8:06:12 AM

INDEXED

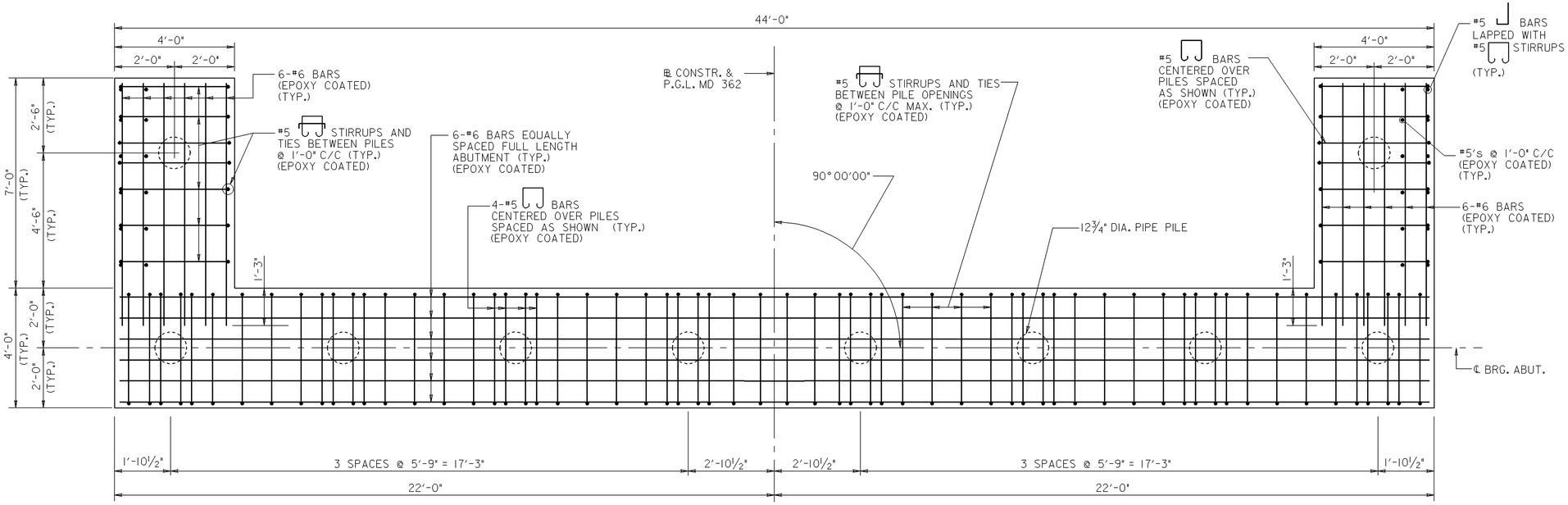

ABUTMENT TOP MAT – PLAN

SCALE: ½" = 1'-0"

NOTE:

#6 BARS OVER PILES NOT SHOWN FOR CLARITY

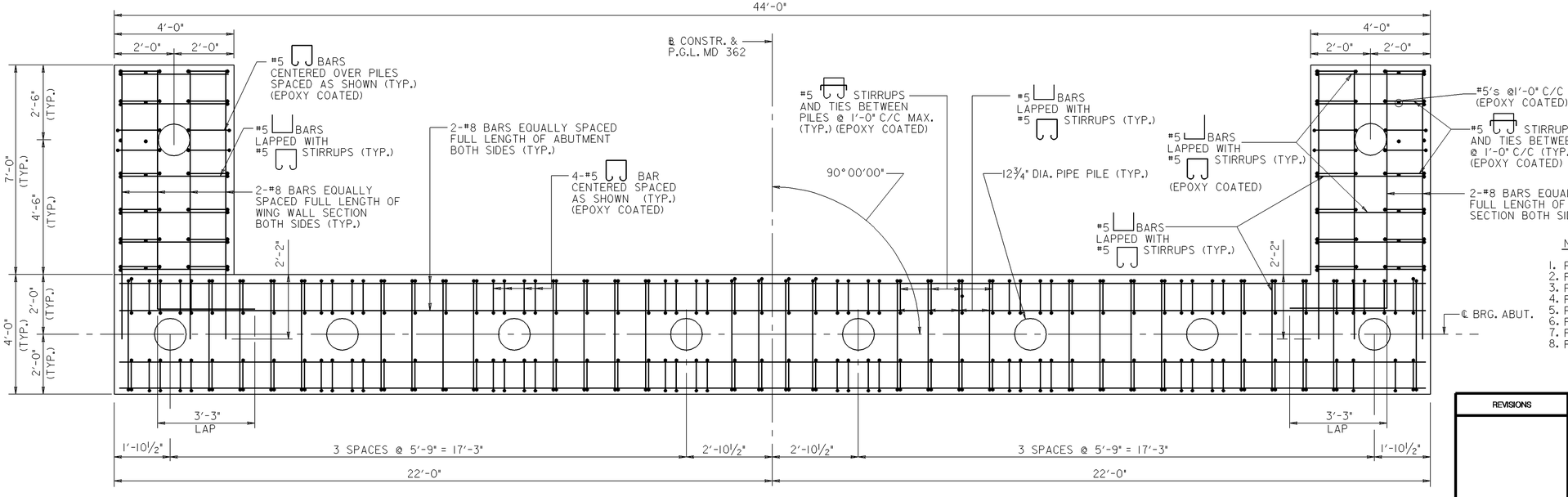

ABUTMENT BOTTOM MAT – PLAN

SCALE: ½" = 1'-0"

FOR ADDITIONAL INFORMATION ON THE CAST-IN-PLACE OPTIONS SEE SHEET NO. S-4.

NOTES:

1. FOR GENERAL PLAN AND ELEVATION, SEE SHEET NO. S-1.
2. FOR GEOMETRIC LAYOUT, SEE SHEET NO. S-3.
3. FOR PILE LAYOUT PLAN, SEE SHEET NO. S-15.
4. FOR ABUTMENT A PLAN AND ELEVATION, SEE SHEET NOS. S-16.
5. FOR ABUTMENT B PLAN AND ELEVATION, SEE SHEET NOS. S-17.
6. FOR ADDITIONAL ABUTMENT DETAILS, SEE SHEET NOS. S-18.
7. FOR WING WALL DETAILS, SEE SHEET NOS. S-20 AND S-21.
8. FOR SHEET PILE CAP DETAILS, SEE SHEET NO. S-22.

CAST-IN-PLACE OPTION | S-19

REVISIONS

STATE OF MARYLAND
DEPARTMENT OF TRANSPORTATION
STATE HIGHWAY ADMINISTRATION
OFFICE OF BRIDGE DEVELOPMENT

PRESTRESSED CONCRETE SLAB PANEL
BRIDGE NO. 19005
ON MD 362 (MOUNT VERNON ROAD)
OVER MONIE CREEK
ABUTMENT DETAILS II

SCALE AS SHOWN DATE OCT., 2008 CONTRACT SO4215180

DESIGNED BY W.N.P.
DRAWN BY GLYNIS
CHECKED BY JCN

E.S.F.
10-14-08

SHEET NO. 32 OF 50

OTHER CONTRACTS FOR THIS STRUCTURE

STRUCTURE INVENTORY NO. 1900500

SURVEY BOOK NO. 31496

S:\CADD\OBD\1900500\032_19005abutdetIICIP.dgn
PRINT DATE: Tuesday, October 06, 2009 at 8:06:35 AM

INDEXED

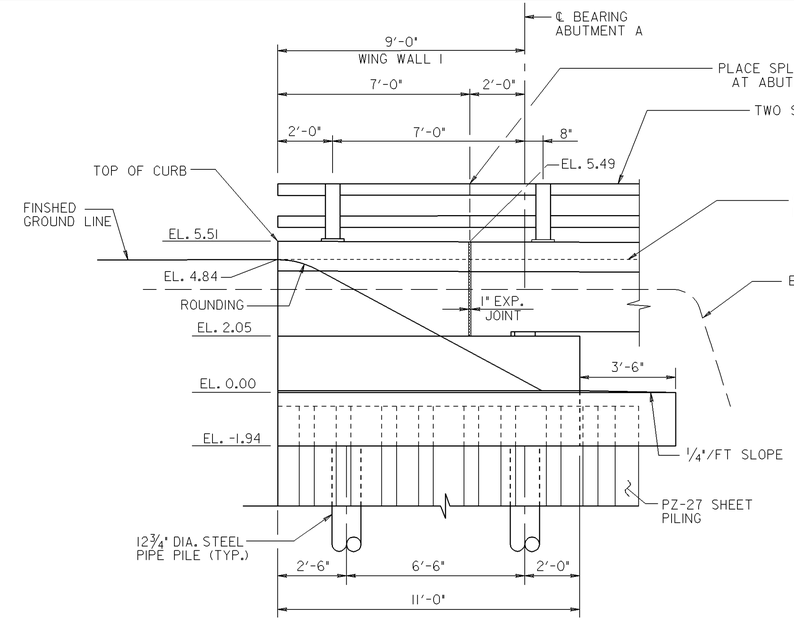

WING WALL I – ELEVATION

SCALE: 3/8"=1'-0"

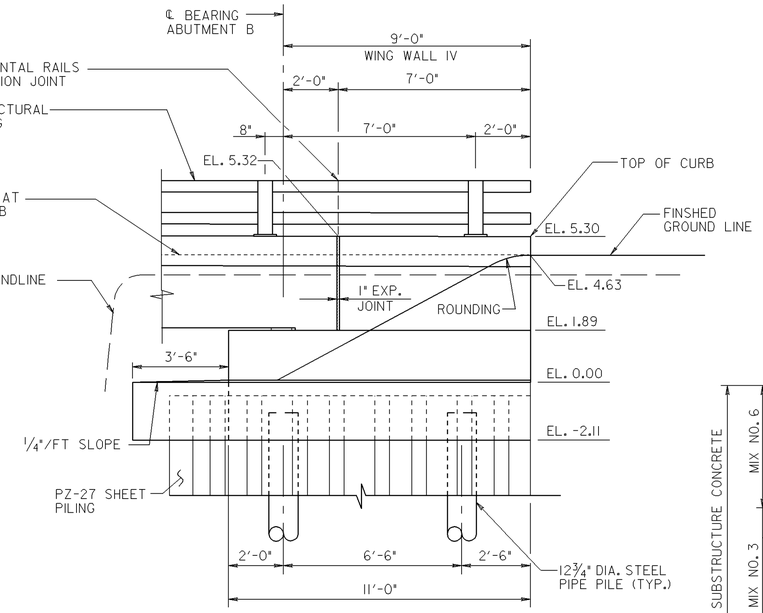

WING WALL IV – ELEVATION

SCALE: 3/8"=1'-0"

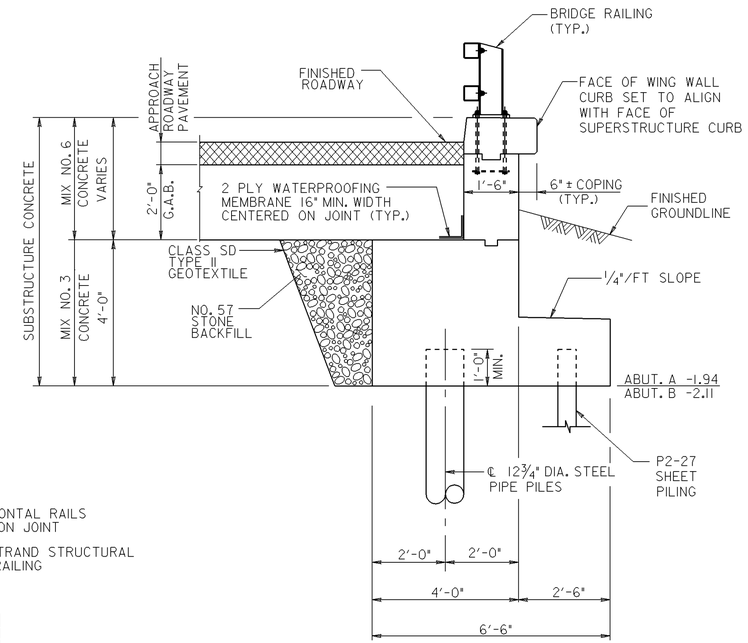

WING WALL – SECTION E–E

SCALE: 1/2" = 1'-0"

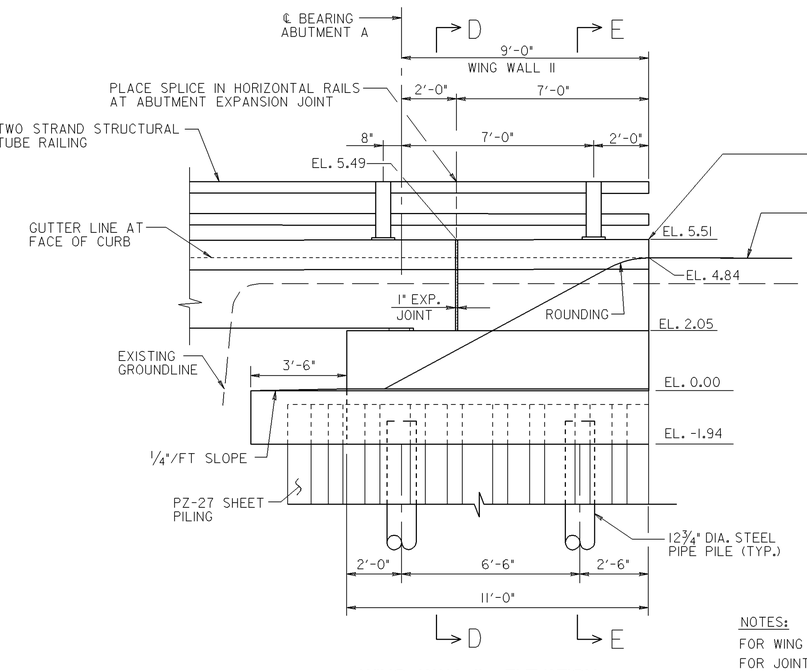

WING WALL II – ELEVATION

SCALE: 3/8"=1'-0"

NOTE:

APPROACH THRIE BEAM TRAFFIC BARRIER NOT SHOWN FOR CLARITY.

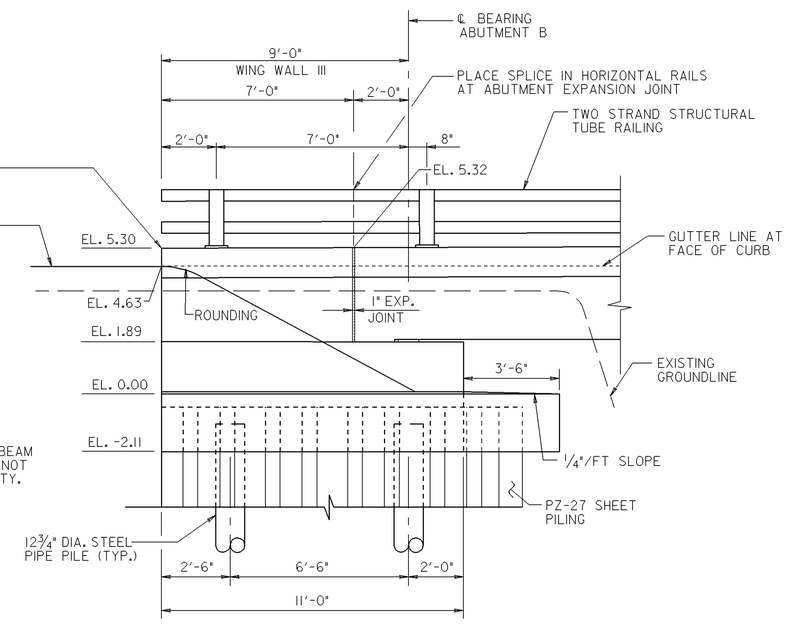

WING WALL III – ELEVATION

SCALE: 3/8"=1'-0"

NOTES:

FOR WING WALL DETAILS, SEE SHEET NO. S-21.
FOR JOINT DETAILS, SEE SHEET NO. S-27.
FOR GENERAL PLAN AND ELEVATION, SEE SHEET NO. S-1.
FOR ABUTMENT DETAILS, SEE SHEET NOS. S-18 AND S-19.
FOR RAILING DETAILS, SEE SHEET NO. S-29.
FOR SHEET PILING DETAILS, SEE SHEET NO. S-22.

FOR ADDITIONAL INFORMATION ON THE CAST-IN-PLACE OPTIONS SEE SHEET NO. S-4.

CAST-IN-PLACE OPTION | S-20

REVISIONS

STATE OF MARYLAND
DEPARTMENT OF TRANSPORTATION
STATE HIGHWAY ADMINISTRATION
OFFICE OF BRIDGE DEVELOPMENT

PRESTRESSED CONCRETE SLAB PANEL
BRIDGE NO. 19005
ON MD 362 (MOUNT VERNON ROAD)
OVER MONIE CREEK
WING WALL ELEVATIONS

SCALE AS SHOWN DATE OCT., 2008 CONTRACT SO4215180

DESIGNED BY W.N.P.
DRAWN BY W.N.P., GLYNIS
CHECKED BY JCN

E.S.F.
10-14-08

SHEET NO. 33 OF 50

INDEXED

OTHER CONTRACTS FOR THIS STRUCTURE

STRUCTURE INVENTORY NO. 1900500

SURVEY BOOK NO. 31496

S:\CADD\OBD\1900500\033_19005wweCIP.dgn
PRINT DATE: Tuesday, October 06, 2009 at 8:06:58 AM

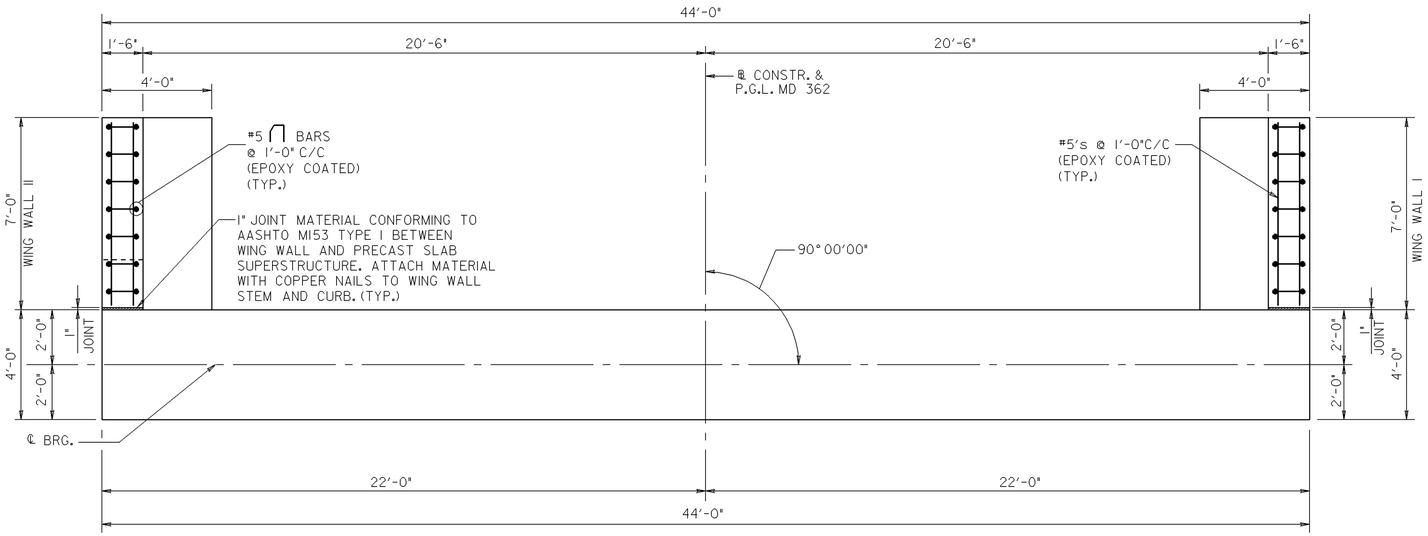

ABUTMENT – PLAN ABOVE BRIDGE SEAT

SCALE: 3/8" = 1'-0"

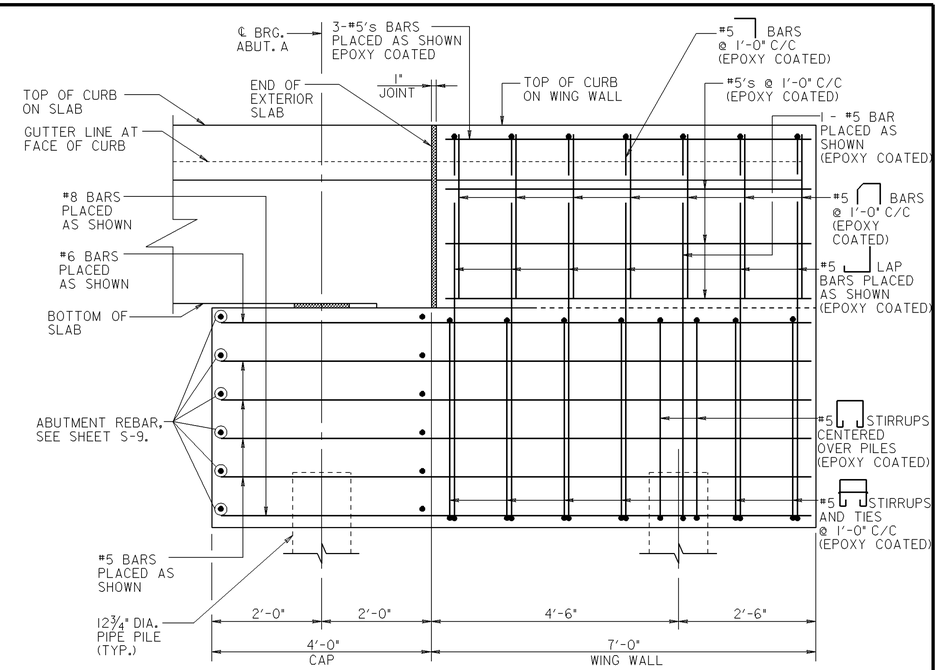

WING WALL ELEVATION–REINFORCING DETAILS

SCALE: 3/4" = 1'-0"

NOTE:

PLACE WING WALL CURB TO MATCH SUPERSTRUCTURE CURB.

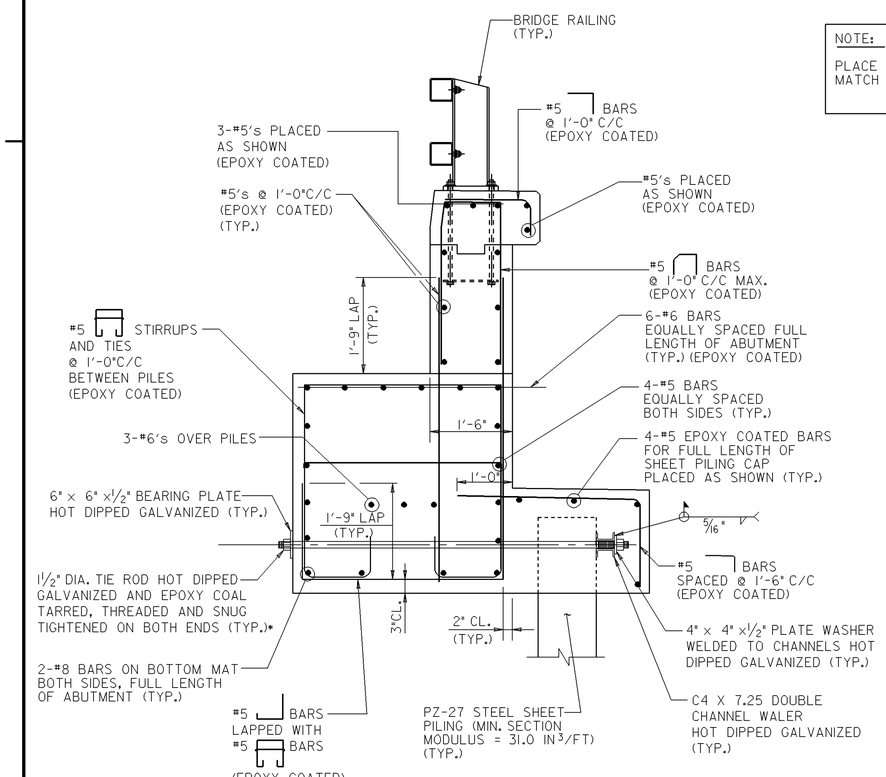

SECTION D–D – REINFORCING DETAIL

SCALE: 3/4" = 1'-0"

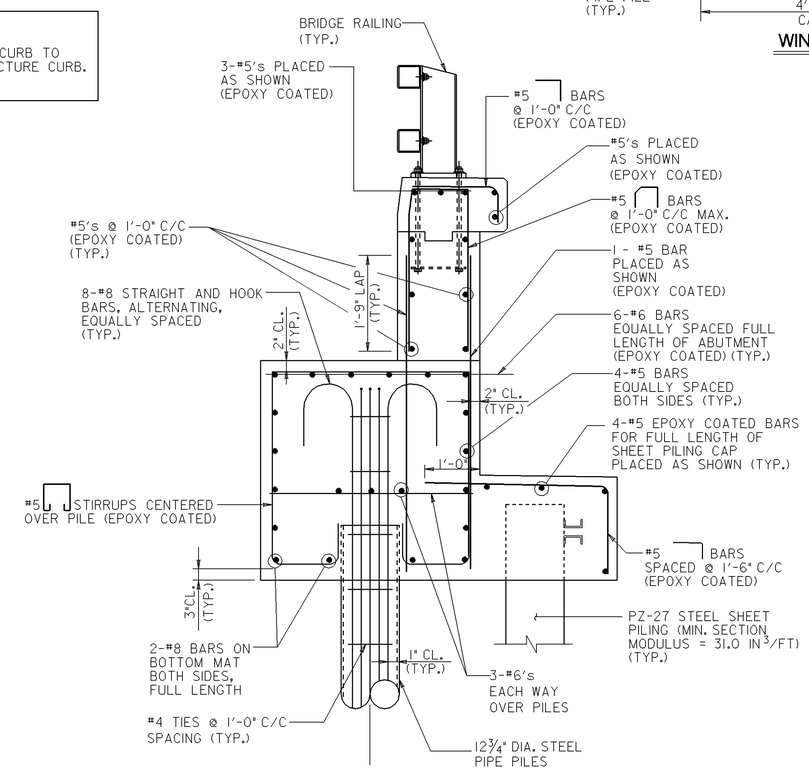

SECTION E–E – REINFORCING DETAIL

SCALE: 3/4" = 1'-0"

NOTE:

1. ALL CONCRETE, DRAINAGE PIPES, #57 STONE, GEOTEXTILE, AND REINFORCING STEEL WITHIN THE ABUTMENTS, WING WALLS, AND SHEET PILE CAPS WILL NOT BE MEASURED FOR PAYMENT BUT SHALL BE INCIDENTAL TO IN THE LUMP SUM "SUBSTRUCTURE CONCRETE" ITEM.

*2. THE CONTRACTOR SHALL SNUG TIGHTEN THE TIE ROD AGAINST THE FORM WORK, DURING WING WALL CAP POURING AND CURING. AFTER THE CAP HAS CURED, THE CONTRACTOR SHALL REMOVE THE FORM WORK AND SNUG TIGHTEN THE TIE ROD AGAINST THE CURED WING WALL CAP.

FOR ADDITIONAL INFORMATION ON THE CAST-IN-PLACE OPTIONS SEE SHEET NO. S-4.

NOTES:

1. FOR GENERAL PLAN AND ELEVATION, SEE SHEET NO. S-1.
2. FOR GEOMETRIC LAYOUT, SEE SHEET NO. S-3.
3. FOR PILE LAYOUT PLAN, SEE SHEET NO. S-15.
4. FOR ABUTMENT A PLAN AND ELEVATION, SEE SHEET NO. S-16.
5. FOR ABUTMENT B PLAN AND ELEVATION, SEE SHEET NO. S-17.
6. FOR WING WALL ELEVATIONS AND DRAINAGE DETAILS, SEE SHEET NO. S-20.
7. FOR ADDITIONAL ABUTMENT DETAILS, SEE SHEET NO. S-18 AND S-19.
8. FOR SHEET PILE CAP DETAILS, SEE SHEET NO. S-22.

CAST–IN–PLACE OPTION | S-21

REVISIONS

STATE OF MARYLAND
DEPARTMENT OF TRANSPORTATION
STATE HIGHWAY ADMINISTRATION
OFFICE OF BRIDGE DEVELOPMENT

PRESTRESSED CONCRETE SLAB PANEL
BRIDGE NO. 19005
ON MD 362 (MOUNT VERNON ROAD)
OVER MONIE CREEK
WING WALL DETAILS

SCALE AS SHOWN | DATE OCT., 2008 | CONTRACT SO4215180

DESIGNED BY W.N.P.
DRAWN BY W.N.P., GLYNIS
CHECKED BY JCN

E.S.F.
10-14-08

SHEET NO. 34 OF 50

OTHER CONTRACTS FOR THIS STRUCTURE

STRUCTURE INVENTORY NO. 1900500 | SURVEY BOOK NO. 31496

S:\CADD\OBD\1900500\034_19005wwdetCIP.dgn
PRINT DATE: Tuesday, October 06, 2009 at 8:09:27 AM

INDEXED

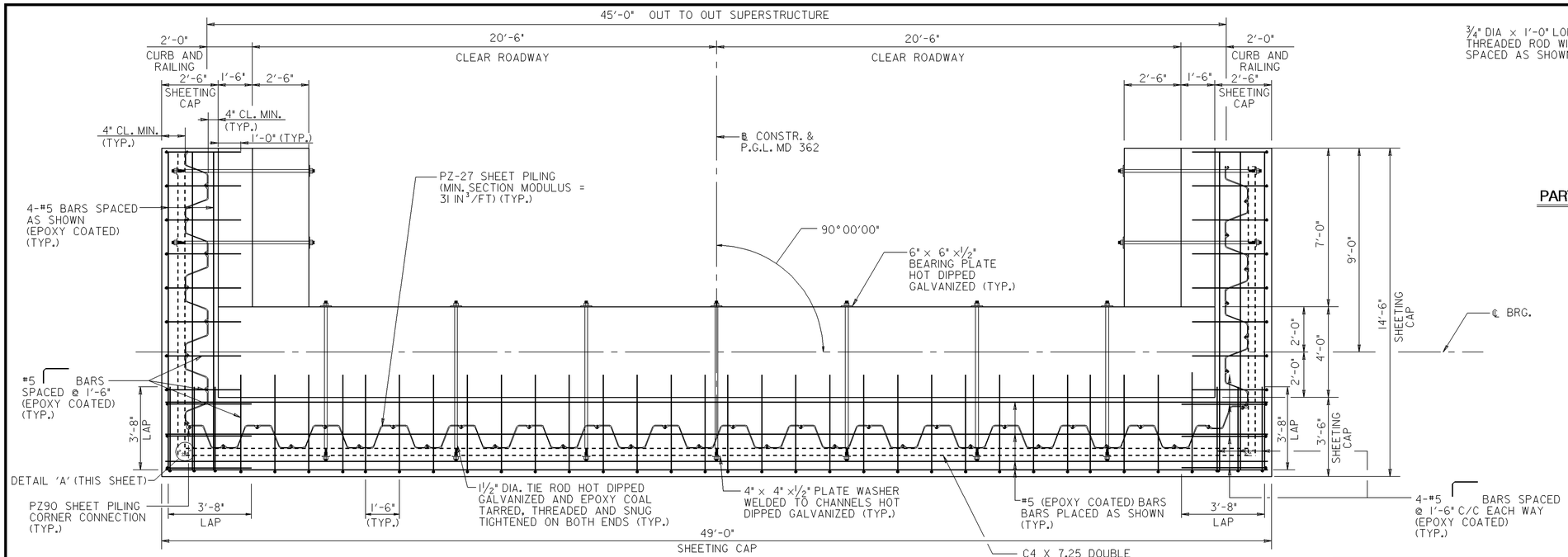

SHEETING CAP REINFORCING DETAIL – PLAN

SCALE: 3/8" = 1'-0"

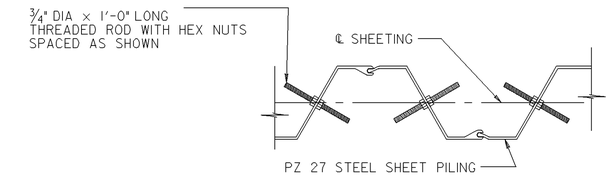

PARTIAL STEEL SHEETING PILING PLAN VIEW

SCALE: 1" = 1'-0"

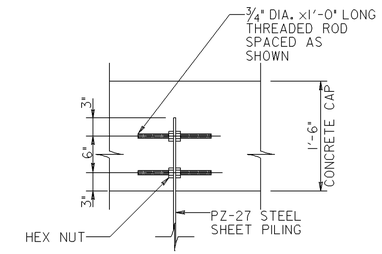

FOR ADDITIONAL INFORMATION ON THE CAST-IN-PLACE OPTIONS SEE SHEET NO. S-4.

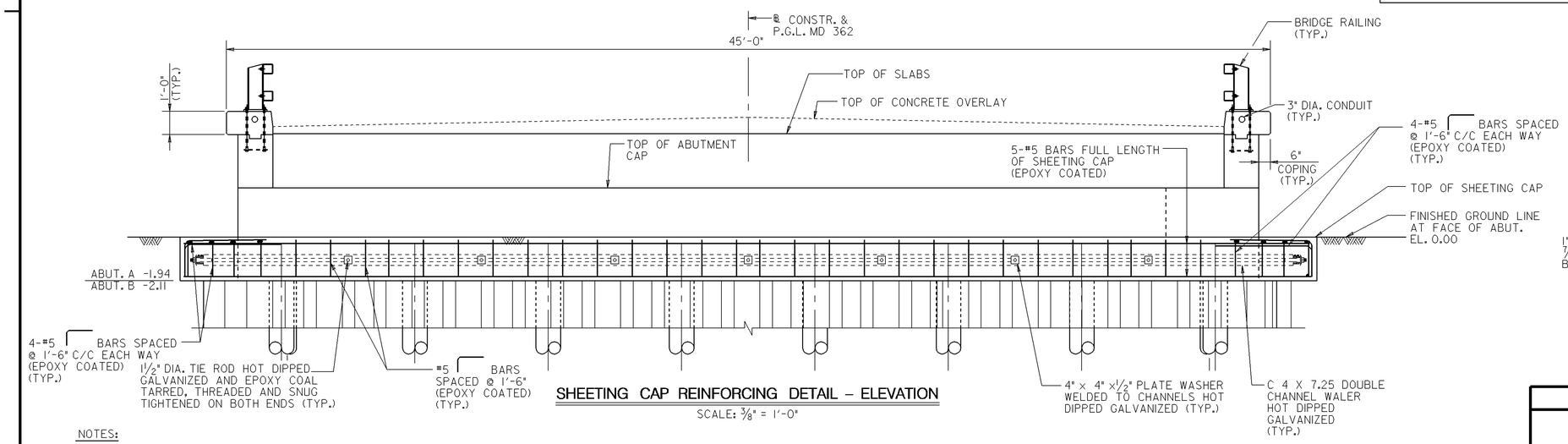

SHEETING CAP REINFORCING DETAIL – ELEVATION

SCALE: 3/8" = 1'-0"

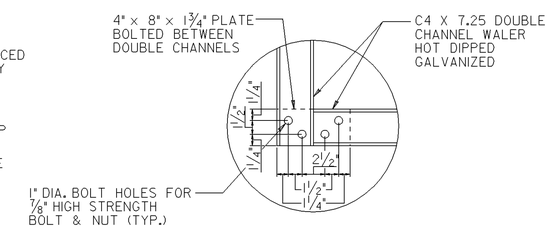

DETAIL 'A' – WALER CONNECTION DETAIL

SCALE: 1 1/2" = 1'-0"

NOTES:

1. REINFORCING STEEL IN ABUTMENT NOT SHOWN FOR CLARITY. FOR ABUTMENT REINFORCEMENT DETAILS, SEE SHEETS NOS. S-18 AND S-19.
2. THE CONTRACTOR SHALL HAVE THE OPTION TO USE A DIFFERENT STEEL SHEETING TYPE THAT SATISFIES THE MINIMUM SECTION MODULUS PROVIDED BY THE PZ 27 SHEETNG SHOWN ON THE PLANS. NO OPTION WILL BE CONSIDERED WITH A SHEETING WALL THICKNESS LESS THAN 3/8". IF THE CONSTRACTOR SELECTS A DEEPER SECTION, THE MINIMUM CLEARANCES MUST BE MAINTAINED. NO ADDITIONAL COST SHALL BE GIVEN REGARDLESS OF THE SHEETING OPTION SELECTED. THE CONTRACTOR SHALL HAVE THE RESPONSIBILITY TO LAYOUT THE SHEETING TO ENSURE THAT ALL SECTIONS TIGHTLY CONNECT TOGETHER. ALL CONNECTORS, INCLUDING AT THE SHEETING CORNERS, NECESSARY TO PROVIDE TIGHT CONNECTIONS, SHALL BE INCIDENTAL TO THE COST OF THE "STEEL SHEET PILING" ITEM.
3. THE COST OF THE THREADED RODS ON THE SHEET PILING IN THE SHEET PILE CAP SHALL BE INCIDENTAL TO THE COST OF THE "STEEL SHEET PILING" ITEM.

NOTES:

1. FOR GENERAL PLAN AND ELEVATION, SEE SHEET NO. S-1.
2. FOR GEOMETRIC LAYOUT, SEE SHEET NO. S-3.
3. FOR PILE LAYOUT PLAN, SEE SHEET NO. S-15.
4. FOR ABUTMENT A PLAN AND ELEVATION, SEE SHEET NO. S-16.
5. FOR ABUTMENT B PLAN AND ELEVATION, SEE SHEET NO. S-17.
6. FOR ADDITIONAL ABUTMENT DETAILS, SEE SHEET NO. S-19.
7. FOR WING WALL DETAILS, SEE SHEET NOS. S-20 AND S-21.

CAST-IN-PLACE OPTION | S-22

REVISIONS

STATE OF MARYLAND
DEPARTMENT OF TRANSPORTATION
STATE HIGHWAY ADMINISTRATION
OFFICE OF BRIDGE DEVELOPMENT

PRESTRESSED CONCRETE SLAB PANEL
BRIDGE NO. 19005
ON MD 362 (MOUNT VERNON ROAD)
OVER MONIE CREEK
SHEET PILE CAP DETAILS

SCALE	AS SHOWN	DATE	OCT., 2008
CONTRACT	S04215180		

DESIGNED BY W.N.P.
DRAWN BY W.N.P., GLYNIS
CHECKED BY JCN
E.S.F.
10-14-08

SHEET NO. 35 OF 50

OTHER CONTRACTS FOR THIS STRUCTURE

STRUCTURE INVENTORY NO. 1900500

SURVEY BOOK NO. 31496

S:\CADD\OBD\1900500\035_19005spcCIP.dgn
PRINT DATE: Tuesday, October 06, 2009 at 8:33:45 AM

INDEXED

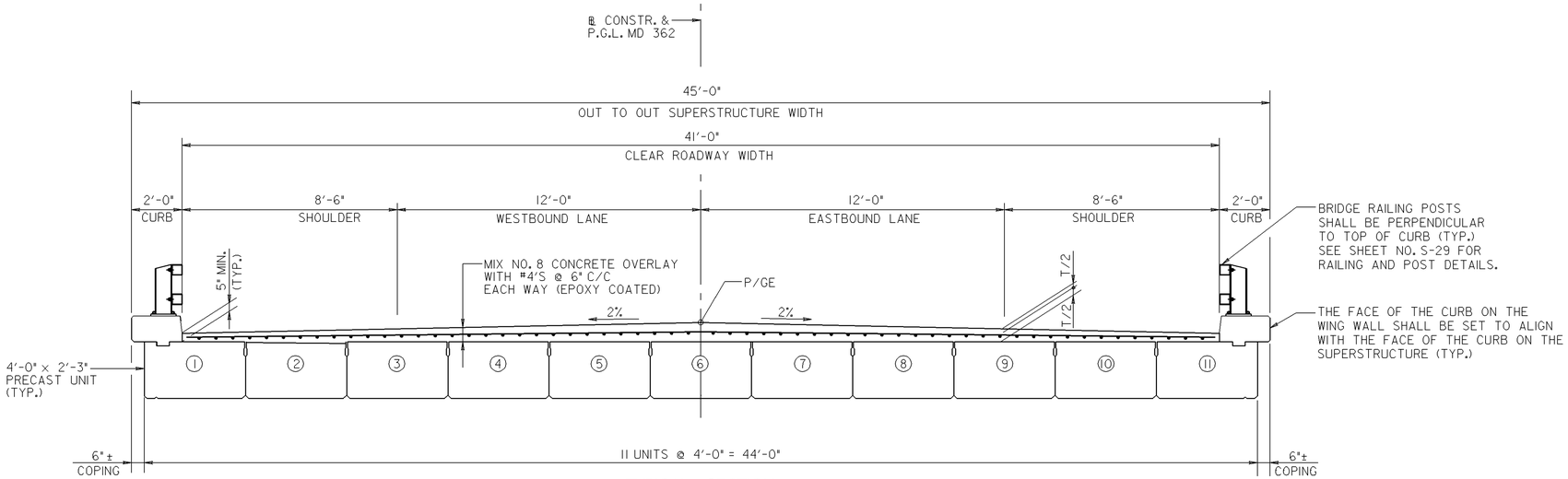

TYPICAL SECTION

SCALE: 3/8" = 1'-0"

CURB NOTES:

1. SLIP FORMING OF CURBS WILL BE ALLOWED.
2. PRECASTING THE CURBS WITH THE EXTERIOR PRECAST SLAB UNITS WILL BE ALLOWED.
3. THE CONTRACTOR IS ALERTED THAT CURB MUST MEASURE 8" FROM TOP OF CONCRETE OVERLAY TO TOP OF CURB. SHOULD THE CONTRACTOR ELECT TO CAST THE CURBS WITH THE EXTERIOR SLAB AT THE PLANT, THE THICKNESS OF CONCRETE OVERLAY MUST BE ACCOUNTED FOR IN SETTING THE TOP OF CURB. IN OTHER WORDS, THE HEIGHT OF THE CURB SHALL BE SET TO ACCOUNT FOR THE VERTICAL CURVE IN THE ROADWAY SINCE THE THICKNESS OF THE OVERLAY WILL BE MORE THAN 5" AT SOME PLACES ALONG THE GUTTERLINE.
4. SHOULD THE CONTRACTOR ELECT TO CAST THE CURB WITH THE EXTERIOR SLAB AT THE PLANT, THE CONTRACTOR MUST ACCOUNT FOR THE ADDITIONAL DEFLECTION OF THE EXTERIOR SLABS RESULTING FROM THE CURBS IN ORDER TO PROPERLY PLACE THE TIE RODS.
5. THE COST OF THE CURBS SHALL BE INCIDENTAL TO "SUPERSTRUCTURE CONCRETE" ITEM.

GENERAL NOTES

Specifications: Latest Specifications and Special Provisions for materials and construction. Latest AASHTO Standard Specifications for Highway Bridges for design.

Design Assumptions: The superimposed dead load is 360 lb/ft/slab unless specified otherwise on the Plans.

No composite action between the prestressed concrete slab panels and the concrete overlay.

Materials: Prestressing shall conform to AASHTO M 203, Grade 270, Low Relaxation Strand.

Concrete shall conform to 440.02.01. The required cylinder strength of the concrete at transfer of the tensioning load and the minimum required cylinder strength of the concrete at 28 days shall be as specified on the Plans.

Construction: Strands shall be pretensioned to the values specified on the Plans.

Camber readings and report shall conform to 440.03.16.

Tolerances shall be as specified in 440.03.17.

The Contractor shall assemble the slab panels for the entire bridge width at the casting plant to ensure that there is no misalignment prior to shipping slab units to the site. Any misalignment of the holes will be cause for rejection of the prestressed concrete slab panel. Drilling or coring of the slab panels is prohibited.

The Contractor will be allowed to place equipment on the slab unit prior to placing the concrete overlay provided that all slab units are in place, the tie rods tensioned, and the joints have been grouted for a minimum period of two days.

Measurement and Payment: Measurement and Payment shall be as specified in 440.04.

CONCRETE OVERLAY SEQUENCE OF OPERATIONS

In preparation for the placement of the Mix No. 8 concrete overlay over the precast concrete slab units, the Contractor shall follow the following sequence of operations:

1. There shall be a minimum of 48 hours between the placement of the concrete curbs or parapets and the tensioning of the tie rods and grouting of the shear keys.
2. Placement of the overlay may occur once the parapet and curbs have met the curing requirements.
3. The overlay reinforcing mat may be assembled on or off the structure. However, the mats must be assembled in units that can be lifted on and off the structure prior to placing overlay. Reinforcing units shall be assembled with proper bar lap lengths to tie reinforcing units together. Temporary supports attached to the mats, such as diagonal rebars or similar support steel such as steel angles, may be required to prevent racking of the mat during lifting operations. No welding will be allowed.
4. To locate the reinforcing mat in the center of the deck overlay the Contractor shall place and tie the support chairs to the underside of the reinforcing mat.
5. The finishing screed shall be set-up and a dry run of the finishing operation made to verify that the reinforcing is properly located and the finished deck elevations shown on the plans can be achieved.
6. The reinforcing mat, including chairs, shall be lifted off of the bridge just prior to the placement of the overlay to permit the entire deck to be cleaned in accordance with Section 440.03.21.
7. Prior to beginning the placement of the overlay, the Contractor shall float the cement slurry across the bridge deck as described in the specifications and work it into the top of the slab units.
8. Keeping the slurry moist with a misting operation, the reinforcing mat shall be placed back on top of the precast slab units, segments tied together and resting on chairs, and the placement of the Mix No. 8 concrete overlay shall commence immediately. It is imperative that the overlay shall be placed while the slurry is in a non-set condition.

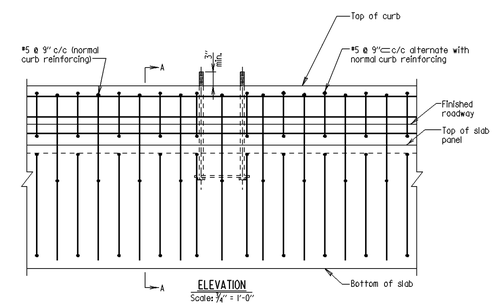

ELEVATION

Scales: 3/4" = 1'-0"

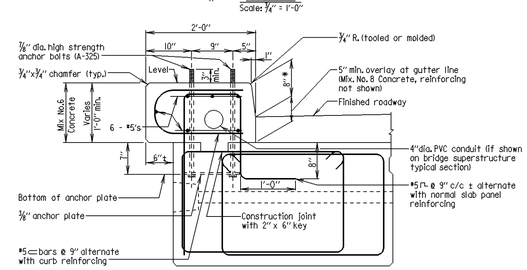

SECTION A-A

Scales: 3/4" = 1'-0"

Notes:
1. The cost of curb including reinforcing, 4" dia. PVC and AASHTO 153 Type I joint seal will be included in Superstructure Concrete item.
2. The cost of anchor bolts and plates will be included in the Railing item.
3. All reinforcing steel shall be epoxy coated.
4. Longitudinal reinforcing steel in the precast slab panel not shown.
5. Prestressing strands in the precast slab panel not shown.
6. For size and spacing of precast slab panel stirrups see precast slab panel details.

* May vary with application.

(USE WITH STD. NO. BR-SS(6.07)-07-375)

CONCRETE OVERLAY NOTES:

1. SEE SECTION 440.03.21 FOR SLAB SURFACE PREPARATION PRIOR TO PLACING OVERLAY.
2. THE ENTIRE CONCRETE OVERLAY SHALL BE MADE IN ONE CONTINUOUS POUR.
3. THE COST OF ALL REINFORCING AND CONCRETE IN THE OVERLAY WILL BE INCLUDED INT HE LUMP SUM BID PRICE FOR THE "SUPERSTRUCTURE CONCRETE" ITEM.

NOTES:

FOR FINISHED DECK ELEVATIONS AND SLAB LAYOUT, SEE SHEET NO. S-24.
FOR SLAB DETAILS, SEE SHEET NOS. S-25 THRU S-28.
FOR RAILING DETAILS, SEE SHEET NO. S-29.

S-23

APPROVAL	STATE OF MARYLAND DEPARTMENT OF TRANSPORTATION STATE HIGHWAY ADMINISTRATION OFFICE OF BRIDGE DEVELOPMENT	SUPER CONCRETE WORK
DIRECTOR OFFICE OF BRIDGE DEVEL. DATE:	PRESTRESSED CONCRETE SLAB PANEL GENERAL NOTES	
REVISIONS SHA / FHWA		
FHWA APPROVAL DATE:	STANDARD NO.	SHEET __ OF __

APPROVAL	STATE OF MARYLAND DEPARTMENT OF TRANSPORTATION STATE HIGHWAY ADMINISTRATION OFFICE OF BRIDGE DEVELOPMENT	SUPER CONCRETE WORK
DIRECTOR OFFICE OF BRIDGE DEVEL. DATE:	PRESTRESSED CONCRETE SLAB PANEL CONTRACTOR'S NOTES	
REVISIONS SHA / FHWA		
FHWA APPROVAL DATE:	STANDARD NO.	SHEET __ OF __

APPROVAL	STATE OF MARYLAND DEPARTMENT OF TRANSPORTATION STATE HIGHWAY ADMINISTRATION OFFICE OF BRIDGE DEVELOPMENT	
DIRECTOR OFFICE OF BRIDGE DEVEL. DATE: 2/8/07	PRECAST CONCRETE SLAB PANEL CURB DETAIL	
REVISIONS SHA / FHWA: 8-3-07, 7-21-08		
FHWA APPROVAL DATE:	STANDARD NO. BR-SS(6.60)-07-377	SHEET __ OF __

REVISIONS

STATE OF MARYLAND
DEPARTMENT OF TRANSPORTATION
STATE HIGHWAY ADMINISTRATION
OFFICE OF BRIDGE DEVELOPMENT

PRESTRESSED CONCRETE SLAB PANEL
BRIDGE NO. 19005
ON MD 362 (MOUNT VERNON ROAD)
OVER MONIE CREEK
TYPICAL SECTION

SCALE AS SHOWN DATE OCT., 2008 CONTRACT SO4215180

DESIGNED BY W.N.P.
DRAWN BY GLYNIS
CHECKED BY JCN

E.S.F.
10-14-08

SHEET NO. 36 OF 50

OTHER CONTRACTS FOR THIS STRUCTURE

STRUCTURE INVENTORY NO. 1900500

SURVEY BOOK NO. 31496

S:\CADD\OBD\1900500\036_19005typ.dgn
PRINT DATE: Tuesday, October 06, 2009 at 8:36:11 AM

INDEXED

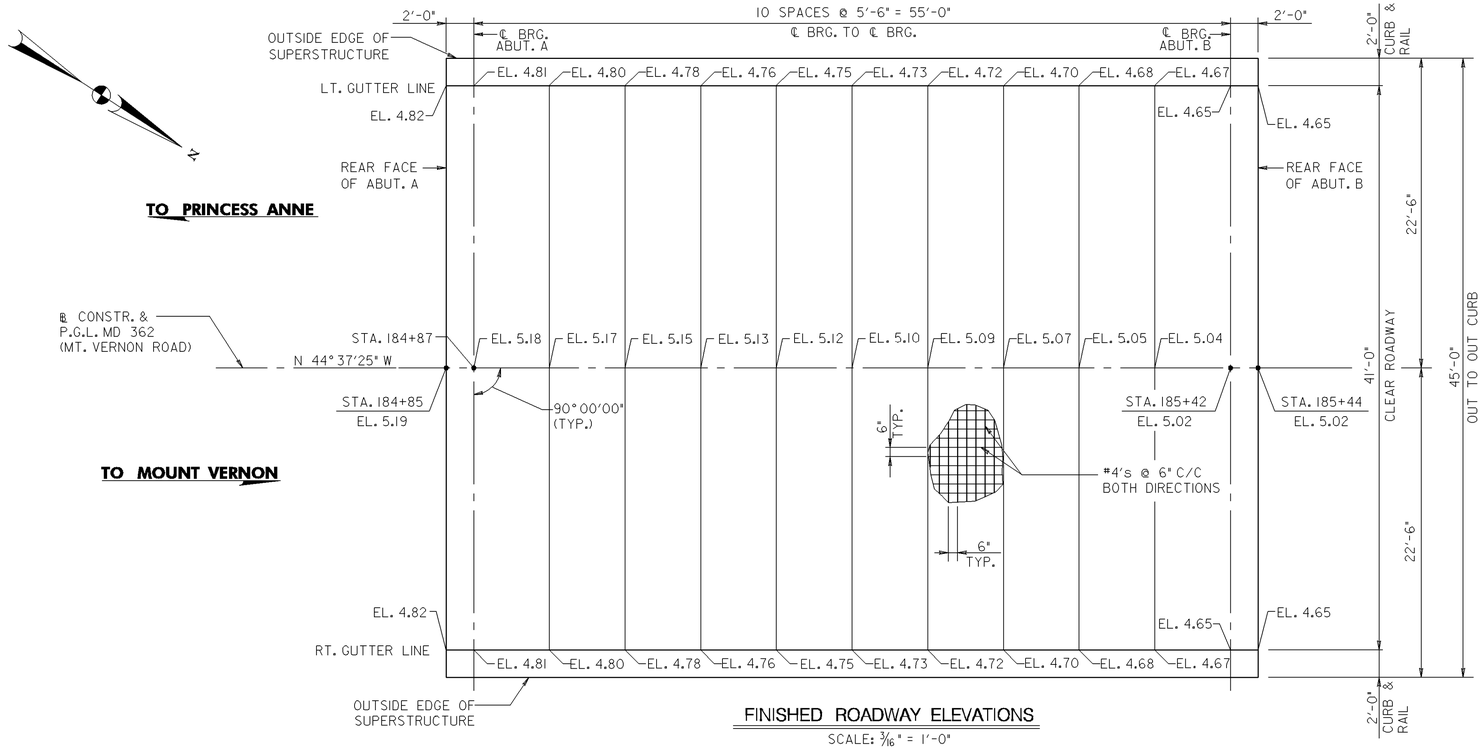

FINISHED ROADWAY ELEVATIONS

SCALE: 3/16" = 1'-0"

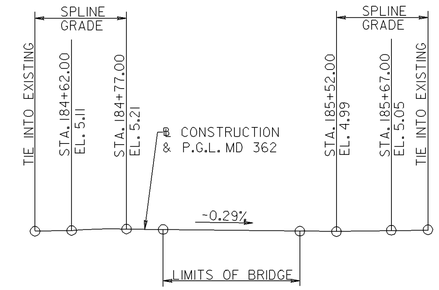

VERTICAL CURVE DATA

SCALE: NONE

FINISHED ROADWAY ELEVATION NOTES:

1. FINISHED ROADWAY ELEVATIONS SHOWN ARE AT TOP OF THE PROPOSED CONCRETE OVERLAY.
2. FOR HORIZONTAL CURVE DATA, SEE SHEET RP-1.

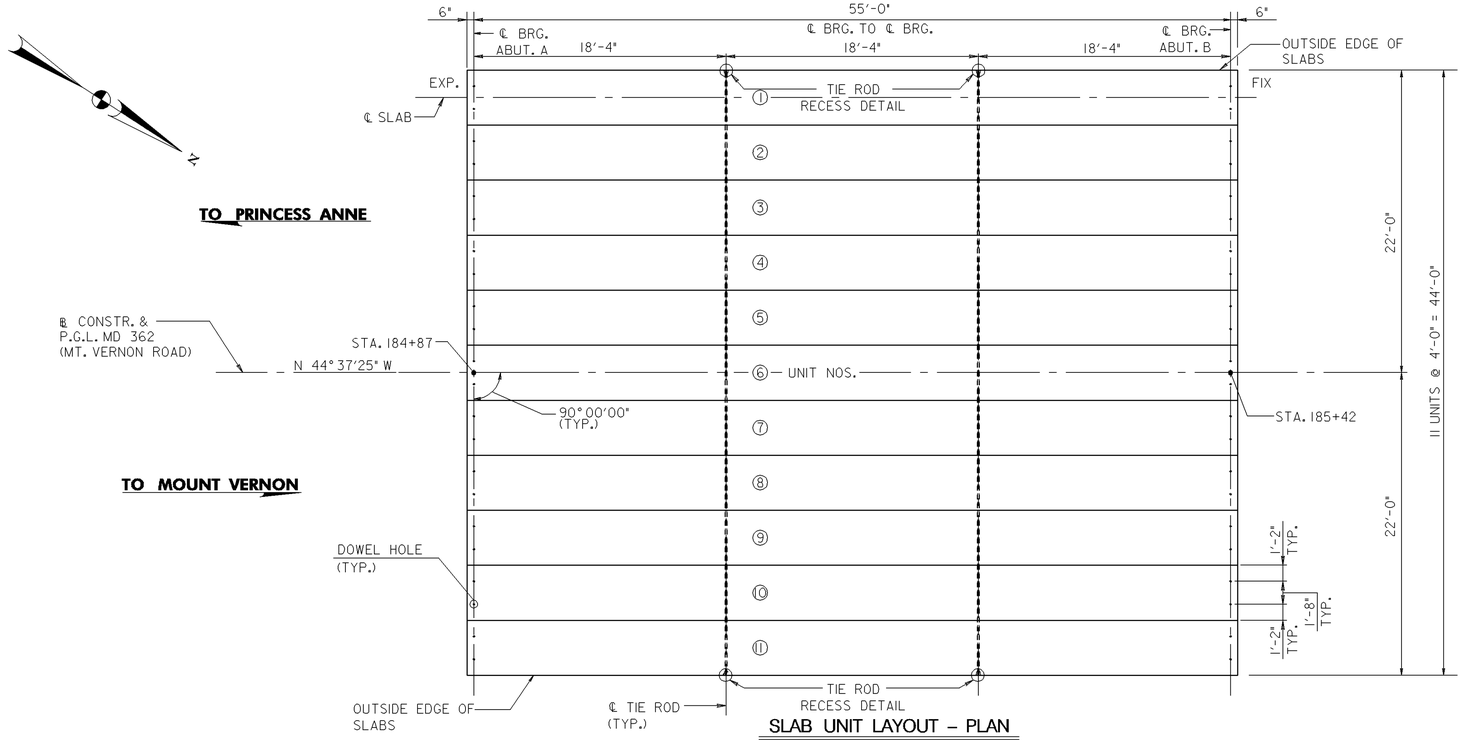

SLAB UNIT LAYOUT – PLAN

SCALE: 3/16" = 1'-0"

SLAB UNIT LAYOUT NOTES:

1. THE CONTRACTOR WILL BE ALLOWED TO PLACE EQUIPMENT ON THE SLAB UNIT PRIOR TO PLACING THE CONCRETE OVERLAY PROVIDED THAT ALL SLAB UNITS ARE IN PLACE, THE TIE RODS TENSIONED, AND THE JOINTS HAVE BEEN GROUTED FOR A MINIMUM PERIOD OF TWO DAYS.
2. FOR TIE ROD RECESS DETAILS, SEE SHEET NO. S-28.
3. FOR SLAB DETAILS, SEE SHEET NOS. S-25 THRU S-27.

S-24

REVISIONS	STATE OF MARYLAND DEPARTMENT OF TRANSPORTATION STATE HIGHWAY ADMINISTRATION OFFICE OF BRIDGE DEVELOPMENT PRESTRESSED CONCRETE SLAB PANEL BRIDGE NO. 19005 ON MD 362 (MOUNT VERNON ROAD) OVER MONIE CREEK FINISHED ROADWAY ELEVATIONS & SLAB LAYOUT
	SCALE AS SHOWN DATE OCT., 2008 CONTRACT SO4215180
	DESIGNED BY W.N.P. DRAWN BY W.N.P., GLYNIS CHECKED BY JCN E.S.F. 10-14-08
	SHEET NO. 37 OF 50

OTHER CONTRACTS FOR THIS STRUCTURE

STRUCTURE INVENTORY NO. 1900500

SURVEY BOOK NO. 31496

S:\CADD\OBD\1900500\037_19005fre&sl.dgn
PRINT DATE: Tuesday, October 06, 2009 at 8:36:36 AM

INDEXED

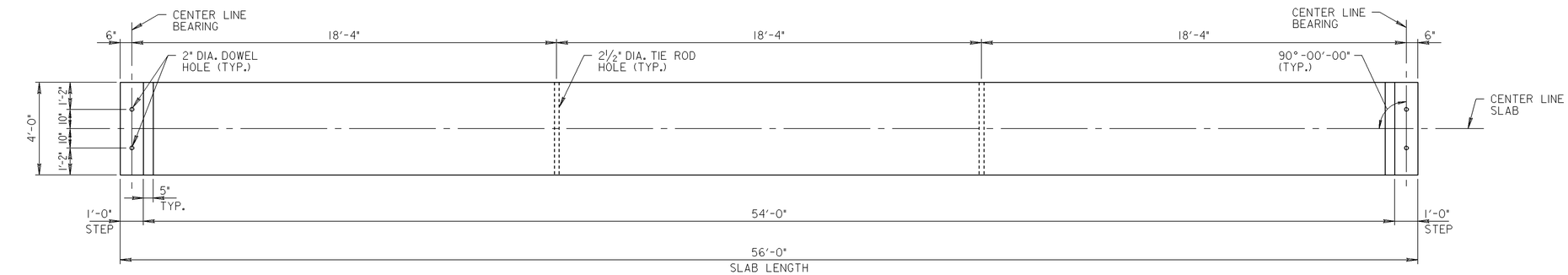

4'-0" INTERIOR SLAB PLAN

SCALE: 3/8" = 1'-0"

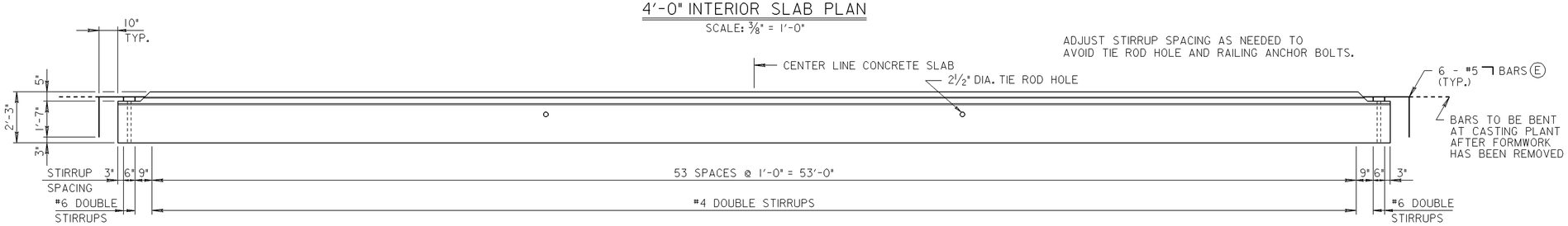

4'-0" INTERIOR SLAB ELEVATION

SCALE: 3/8" = 1'-0"

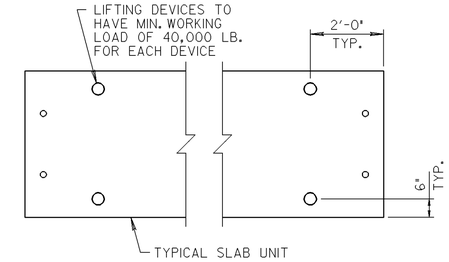

LIFTING DEVICES LOCATION

SCALE: 1/2" = 1'-0"

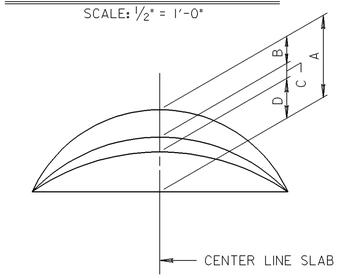

CAMBER DIAGRAM

SCALE: NONE

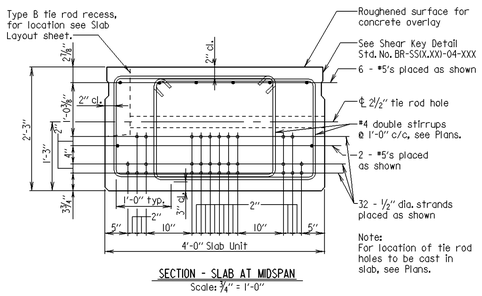

SECTION - SLAB AT MIDSPAN

Scale: 3/4" = 1'-0"

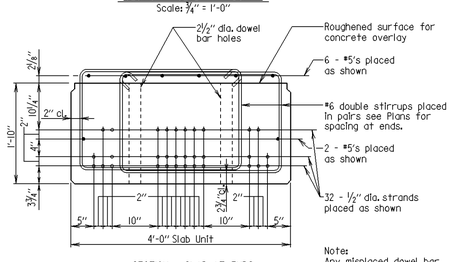

SECTION - SLAB AT ENDS

Scale: 3/4" = 1'-0"

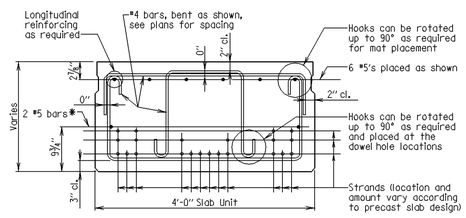

ALTERNATE REINFORCING SECTION - SLAB AT MIDSPAN

Scale: 3/4" = 1'-0"

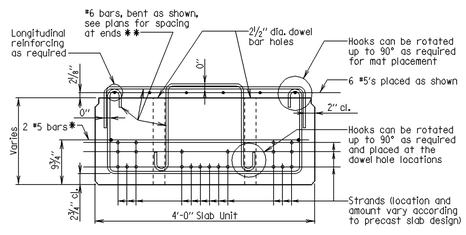

ALTERNATE REINFORCING SECTION - SLAB AT ENDS

Scale: 3/4" = 1'-0"

* These bars are only required for span lengths greater than 50'-0".

** On span lengths that are 25'-0" or less, the contractor may use #4 bars at the end of the slabs.

SLAB NOTES:

1. Ⓔ INDICATES REINFORCING STEEL TO BE EPOXY COATED.
2. EXTREME CARE SHALL BE USED IN LOCATING THE TIE ROD HOLES DURING THE CASTING OPERATION. THE CONTRACTOR SHALL ASSEMBLE THE SLAB UNITS FOR EACH SPAN FOR EACH STAGE OF CONSTRUCTION AND THEN FOR THE ENTIRE BRIDGE WIDTH AT THE CASTING PLANT TO ENSURE THAT THERE IS NO MISALIGNMENT OF THE TIE ROD HOLE(S) PRIOR TO SHIPPING THE SLAB UNITS. ANY MISALIGNMENT OF THE TIE ROD HOLE(S) WILL BECAUSE FOR REJECTION OF THE SLAB UNIT(S). NO DRILLING OR CORING OF THE SLAB UNIT(S) WILL BE PERMITTED.
3. SLAB UNIT LENGTHS IN THE CASTING BED SHALL BE DETERMINED AND DEPICTED IN THE SHOP DRAWINGS TO COMPENSATE FOR GRADE SHORTENING DUE TO THE PRESTRESS EFFECT.
4. THE TOP SURFACE OF ALL SLAB UNITS SHALL BE ROUGH FINISHED TO A FULL AMPLITUDE OF 1/4" AND SCRUBBED TRANSVERSELY WITH A COARSE WIRE BRUSH TO REMOVE ALL LAITANCE AND TO PRODUCE A ROUGHENED SURFACE FOR BONDING WITH THE CONCRETE OVERLAY.

CAMBER NOTES:

CAMBER DUE TO PRESTRESS PLUS SLAB DEAD LOAD TO BE CHECKED IN THE FIELD.

THE THICKNESS OF THE CONCRETE OVERLAY SHALL BE VARIED TO COMPENSATE FOR ANY INACCURACIES IN THE CAMBER OF OF SLABS.

PRESTRESS CAMBER AND DEAD LOAD DEFLECTION DATA SHOWN IS THEORETICAL AND MAY VARY WITH CONCRETE STRENGTH, VARIABLE PRESTRESSING CONDITIONS AND PRESTRESS LOSSES.

CAMBER IN SLABS WILL INCREASE DUE TO CONCRETE CREEP DURING STORAGE. PRECAUTIONS SHALL BE TAKEN BY LOADING OR OTHER MEANS TO PREVENT ADDITIONAL CAMBER FROM DEVELOPING DURING STORAGE OF PRESTRESSED SLABS.

A = 1 1/16" (ESTIMATED CAMBER DUE TO PRESTRESS)
B = 7/8" (DEFLECTION DUE TO DEAD LOAD OF PRECAST PRESTRESSED SLABS)
C = 5/16" (DEFLECTION DUE TO DEAD LOAD OF CAST-IN-PLACE CONCRETE SLAB AND CURBS)
D = 0" (NET FINAL CAMBER)

NOTES:

FOR ADDITIONAL SLAB DETAILS, SEE SHEET NOS. S-26 THRU S-28.
FOR ELASTOMERIC BEARING PAD DETAILS, SEE SHEET NO. S-28.

S-25

Notes:
1. All reinforcing steel to be epoxy coated.
2. Adjust stirrup spacing to avoid tie rod holes as needed.

APPROVAL	STATE OF MARYLAND DEPARTMENT OF TRANSPORTATION STATE HIGHWAY ADMINISTRATION OFFICE OF BRIDGE DEVELOPMENT	SUPER CONCRETE WORK
DIRECTOR OFFICE OF BRIDGE DEVEL.	SIMPLE SPAN GREATER THAN 50'-0" TO 55'-0" INTERIOR PRECAST CONCRETE SLAB STANDARD DETAILS	
DATE:		
REVISIONS: SHA / FHWA		
FHWA APPROVAL DATE:	STANDARD NO. SHEET ___ OF ___	

Note:
All reinforcing steel to be epoxy coated.

APPROVAL	STATE OF MARYLAND DEPARTMENT OF TRANSPORTATION STATE HIGHWAY ADMINISTRATION OFFICE OF BRIDGE DEVELOPMENT	SUPER CONCRETE WORK
DIRECTOR OFFICE OF BRIDGE DEVEL.	INTERIOR 4'-0" PRECAST CONCRETE SLAB PANEL ALTERNATE REINFORCING DETAILS	
DATE:		
REVISIONS: SHA / FHWA		
FHWA APPROVAL DATE:	STANDARD NO. SHEET ___ OF ___	

REVISIONS

STATE OF MARYLAND
DEPARTMENT OF TRANSPORTATION
STATE HIGHWAY ADMINISTRATION
OFFICE OF BRIDGE DEVELOPMENT

PRESTRESSED CONCRETE SLAB PANEL
BRIDGE NO. 19005
ON MD 362 (MOUNT VERNON ROAD)
OVER MONIE CREEK
INTERIOR SLAB

SCALE AS SHOWN DATE OCT., 2008 CONTRACT SO4215180

DESIGNED BY W.N.P.
DRAWN BY SHA, GLYNIS, J.T.
CHECKED BY JCN

E.S.F.
10-14-08

SHEET NO. 38 OF 50

INDEXED

OTHER CONTRACTS FOR THIS STRUCTURE

STRUCTURE INVENTORY NO. 1900500

SURVEY BOOK NO. 31496

S:\CADD\OBD\1900500\038_19005intslb.dgn
PRINT DATE: Tuesday, October 06, 2009 at 8:37:20 AM

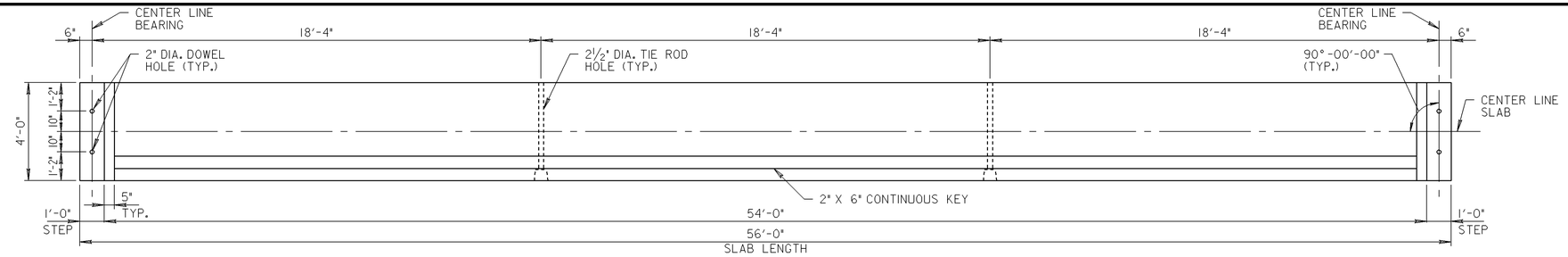

4'-0" EXTERIOR SLAB PLAN

SCALE: 3/8" = 1'-0"

ADJUST CURB REBAR AND STIRRUP SPACING AS NEEDED TO AVOID TIE ROD HOLE AND RAILING ANCHOR BOLTS.

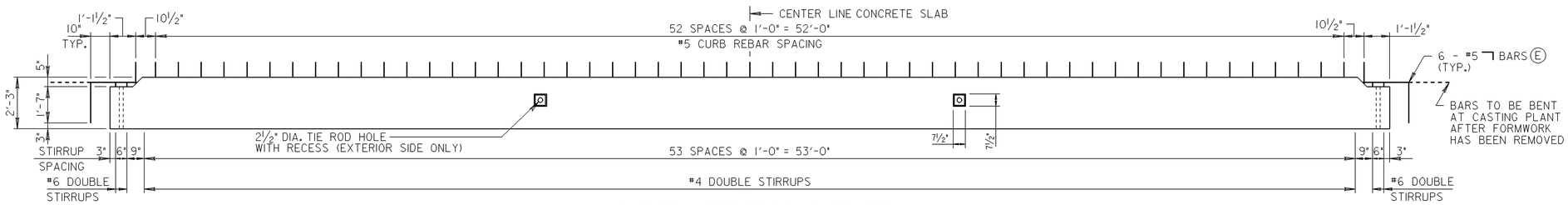

4'-0" EXTERIOR SLAB ELEVATION

SCALE: 3/8" = 1'-0"

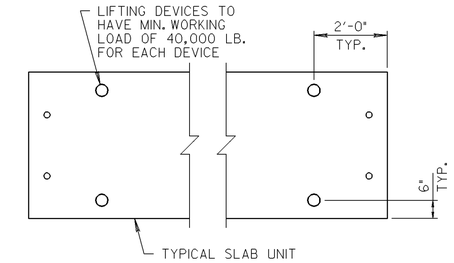

LIFTING DEVICES LOCATION

SCALE: 1/2" = 1'-0"

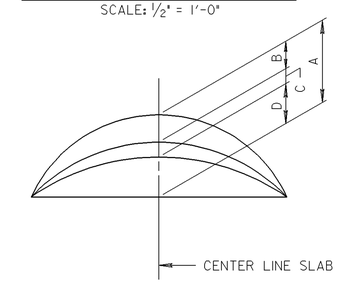

CAMBER DIAGRAM

SCALE: NONE

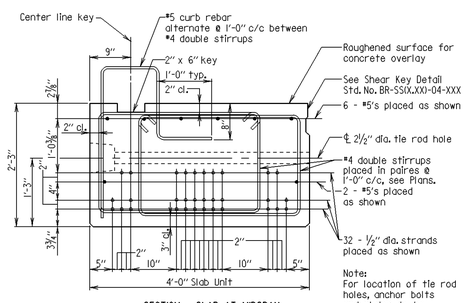

SECTION - SLAB AT MIDSPAN

Scale: 3/4" = 1'-0"

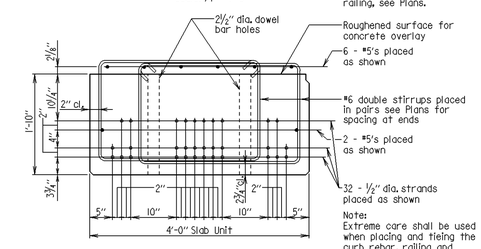

SECTION - SLAB AT ENDS

Scale: 3/4" = 1'-0"

Notes:
1. All reinforcing steel to be epoxy coated.
2. Adjust stirrup and curb rebar spacing to avoid tie rod holes and railing anchor bolts as needed, see Plans.

APPROVAL	STATE OF MARYLAND DEPARTMENT OF TRANSPORTATION STATE HIGHWAY ADMINISTRATION OFFICE OF BRIDGE DEVELOPMENT	SUPER CONCRETE WORK
DIRECTOR OFFICE OF BRIDGE DEVEL. DATE:	SIMPLE SPAN GREATER THAN 50'-0" TO 55'-0" EXTERIOR PRECAST CONCRETE SLAB STANDARD DETAILS	
REVISIONS SHA / FHWA		
FHWA APPROVAL DATE:	STANDARD NO.	SHEET ___ OF ___

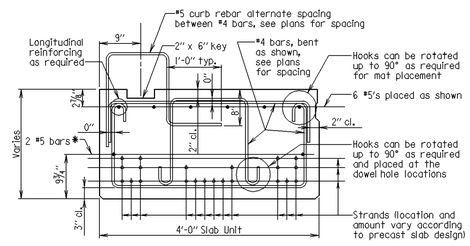

ALTERNATE REINFORCING SECTION - SLAB AT MIDSPAN

Scale: 3/4" = 1'-0"

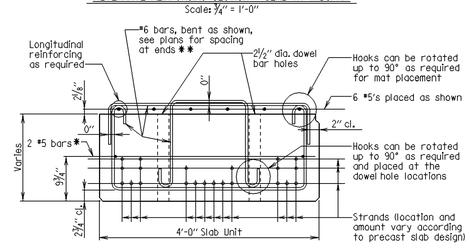

ALTERNATE REINFORCING SECTION - SLAB AT ENDS

Scale: 3/4" = 1'-0"

* These bars are only required for span lengths greater than 50'-0".

** On span lengths that are 25'-0" or less, the contractor may use #4 bars at the end of the slabs.

Note:
All reinforcing steel to be epoxy coated.

APPROVAL	STATE OF MARYLAND DEPARTMENT OF TRANSPORTATION STATE HIGHWAY ADMINISTRATION OFFICE OF BRIDGE DEVELOPMENT	SUPER CONCRETE WORK
DIRECTOR OFFICE OF BRIDGE DEVEL. DATE:	EXTERIOR 4'-0" PRECAST CONCRETE SLAB PANEL ALTERNATE REINFORCING DETAILS	
REVISIONS SHA / FHWA		
FHWA APPROVAL DATE:	STANDARD NO.	SHEET ___ OF ___

SLAB NOTES:

1. Ⓔ INDICATES REINFORCING STEEL TO BE EPOXY COATED.
2. EXTREME CARE SHALL BE USED IN LOCATING THE TIE ROD HOLES DURING THE CASTING OPERATION. THE CONTRACTOR SHALL ASSEMBLE THE SLAB UNITS FOR EACH SPAN FOR EACH STAGE OF CONSTRUCTION AND THEN FOR THE ENTIRE BRIDGE WIDTH AT THE CASTING PLANT TO ENSURE THAT THERE IS NO MISALIGNMENT OF THE TIE ROD HOLE(S) PRIOR TO SHIPPING THE SLAB UNITS. ANY MISALIGNMENT OF THE TIE ROD HOLE(S) WILL BE CAUSE FOR REJECTION OF THE SLAB UNIT(S). NO DRILLING OR CORING OF THE SLAB UNIT(S) WILL BE PERMITTED.
3. SLAB UNIT LENGTHS IN THE CASTING BED SHALL BE DETERMINED AND DEPICTED IN THE SHOP DRAWINGS TO COMPENSATE FOR GRADE SHORTENING DUE TO THE PRESTRESS EFFECT.
4. THE TOP SURFACE OF ALL SLAB UNITS SHALL BE ROUGH FINISHED TO A FULL AMPLITUDE OF 1/4" AND SCRUBBED TRANSVERSELY WITH A COARSE WIRE BRUSH TO REMOVE ALL LAITANCE AND TO PRODUCE A ROUGHENED SURFACE FOR BONDING WITH THE CONCRETE OVERLAY.
5. EXTREME CARE SHALL BE USED WHEN PLACING AND TIEING THE CURB REBAR AND ANCHOR BOLTS TO PROVIDE FOR THE REQUIRED CLEARANCES. ANY MISPLACED REBAR OR ANCHOR BOLTS WILL BE CAUSE FOR REJECTION OF THE PRECAST SLAB UNIT.

CAMBER NOTES:

CAMBER DUE TO PRESTRESS PLUS SLAB DEAD LOAD TO BE CHECKED IN THE FIELD.

THE THICKNESS OF THE CONCRETE OVERLAY SHALL BE VARIED TO COMPENSATE FOR ANY INACCURACIES IN THE CAMBER OF SLABS.

PRESTRESS CAMBER AND DEAD LOAD DEFLECTION DATA SHOWN IS THEORETICAL AND MAY VARY WITH CONCRETE STRENGTH, VARIABLE PRESTRESSING CONDITIONS AND PRESTRESS LOSSES.

CAMBER IN SLABS WILL INCREASE DUE TO CONCRETE CREEP DURING STORAGE. PRECAUTIONS SHALL BE TAKEN BY LOADING OR OTHER MEANS TO PREVENT ADDITIONAL CAMBER FROM DEVELOPING DURING STORAGE OF PRESTRESSED SLABS.

A = 1 1/16" (ESTIMATED CAMBER DUE TO PRESTRESS)
B = 7/8" (DEFLECTION DUE TO DEAD LOAD OF PRECAST PRESTRESSED SLABS)
C = 3/16" (DEFLECTION DUE TO DEAD LOAD OF CAST-IN-PLACE CONCRETE SLAB AND CURBS)
D = 0" (NET FINAL CAMBER)

NOTES:

FOR ADDITIONAL SLAB DETAILS, SEE SHEET NOS. S-25, S-27, AND S-28.
FOR ELASTOMERIC BEARING PAD DETAILS, SEE SHEET NO. S-28.

S-26

REVISIONS	STATE OF MARYLAND DEPARTMENT OF TRANSPORTATION STATE HIGHWAY ADMINISTRATION OFFICE OF BRIDGE DEVELOPMENT
	PRESTRESSED CONCRETE SLAB PANEL BRIDGE NO. 19005 ON MD 362 (MOUNT VERNON ROAD) OVER MONIE CREEK EXTERIOR SLAB
	SCALE AS SHOWN DATE OCT., 2008 CONTRACT SO4215180
	DESIGNED BY W.N.P.
	DRAWN BY SHA, W.N.P., GLYNIS, J.T.
	CHECKED BY JCN
	E.S.F. 10-14-08
	SHEET NO. 39 OF 50
	INDEXED

OTHER CONTRACTS FOR THIS STRUCTURE _____ _____

STRUCTURE INVENTORY NO. 1900500 | SURVEY BOOK NO. 31496 | S:\CADD\OBD\1900500\039_19005extslb.dgn PRINT DATE: Tuesday, October 06, 2009 at 8:40:02 AM

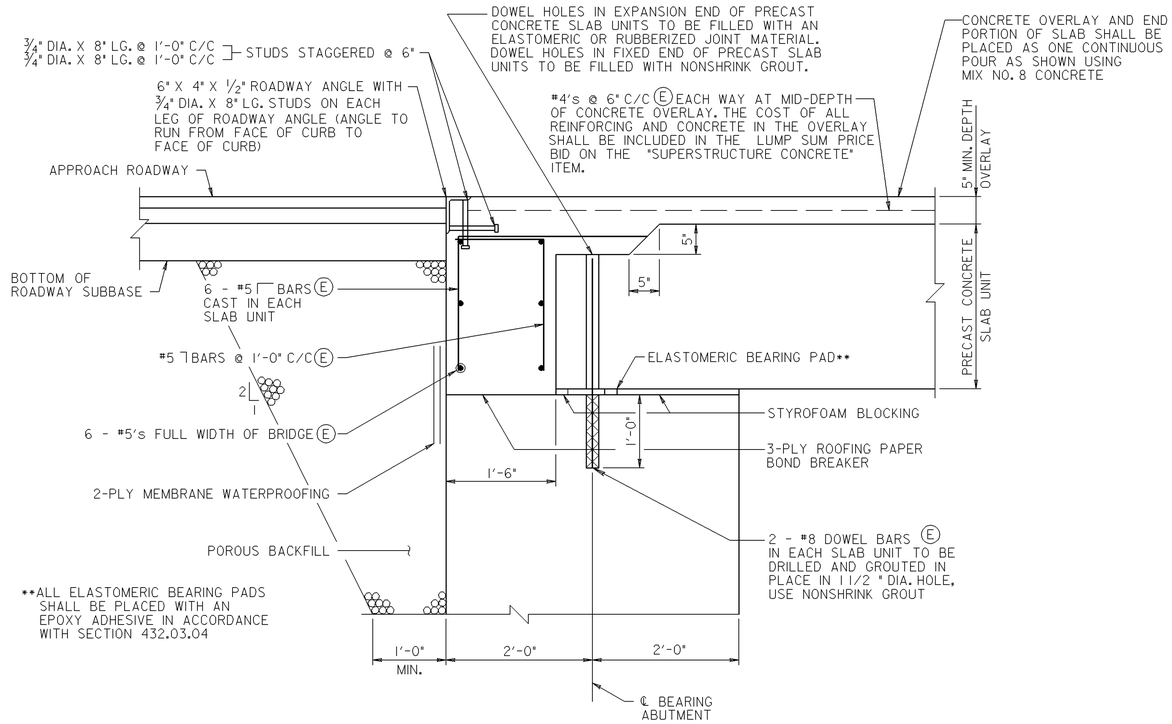

SLAB DETAIL AT ABUTMENT

SCALE: 1" = 1'-0"

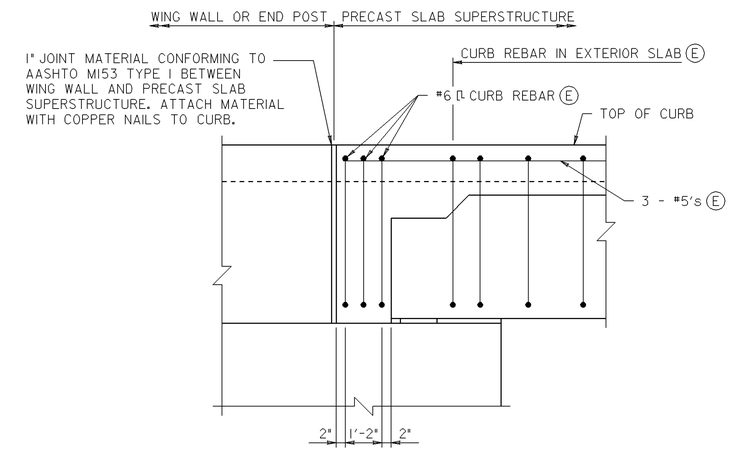

CURB JOINT DETAIL

SCALE: 3/4" = 1'-0"

NOTES:

THE COST OF AND CONCRETE OVERLAY INCLUDING REINFORCING WILL BE PAID FOR UNDER THE SUPERSTRUCTURE CONCRETE ITEM.

THE COST OF ANCHOR BOLTS AND PLATE WILL BE PAID FOR UNDER THE RAILING ITEM.

(E) = EPOXY COATED REINFORCEMENT

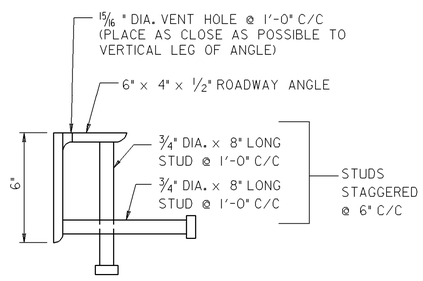

ROADWAY ANGLE DETAIL - SECTION

SCALE: 3" = 1'-0"

NOTE:

THE COST OF THE ROADWAY ANGLES WILL BE INCIDENTAL TO THE "SUPERSTRUCTURE CONCRETE" ITEM.

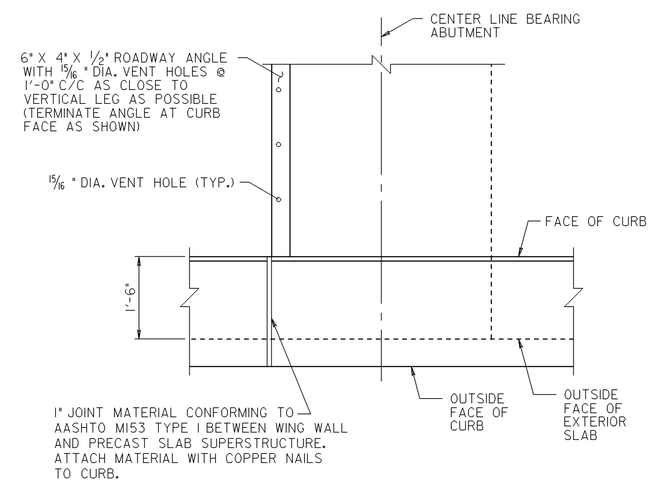

CURB JOINT DETAIL - PLAN

SCALE: 3/4" = 1'-0"

S-27

REVISIONS	STATE OF MARYLAND DEPARTMENT OF TRANSPORTATION STATE HIGHWAY ADMINISTRATION OFFICE OF BRIDGE DEVELOPMENT PRESTRESSED CONCRETE SLAB PANEL BRIDGE NO. 19005 ON MD 362 (MOUNT VERNON ROAD) OVER MONIE CREEK SOLID SLAB DETAILS
	SCALE AS SHOWN DATE OCT., 2008 CONTRACT SO4215180
	DESIGNED BY W.N.P. DRAWN BY SHA CHECKED BY JCN E.S.F. 10-14-08
	SHEET NO. 40 OF 50

OTHER CONTRACTS FOR THIS STRUCTURE

STRUCTURE INVENTORY NO. 1900500 | SURVEY BOOK NO. 31496

S:\CADD\OBD\1900500\040_19005ssdet.dgn
PRINT DATE: Tuesday, October 06, 2009 at 8:41:46 AM

INDEXED

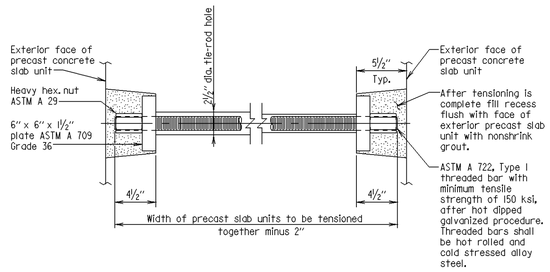

SECTION
LATERAL TIE-ROD DETAIL
Scale: 1½" = 1'-0"

Span Length (ft)	Rod Diameter (inches)	Tension Force (kips)	Plate Hole Diameter (inches)	Minimum Root Area through threads (in²)
up to 35	1	80	1⅜	0.56
over 35 to 55	1¼	120	1⅝	0.91

Notes:
1. Tie-rods to be tensioned prior to filling shear keys and placing overlay.
2. All nuts, plates and tie rods to be hot dipped galvanized.
3. All nonshrink grout shall conform to 902.11(C).
4. Heavy hex. nut shall be supplied by tie rod manufacturer and develop full tensile strength of tie rod.

APPROVAL	STATE OF MARYLAND DEPARTMENT OF TRANSPORTATION STATE HIGHWAY ADMINISTRATION OFFICE OF BRIDGE DEVELOPMENT
DIRECTOR OFFICE OF BRIDGE DEVEL. DATE:	PRECAST CONCRETE SLAB UNITS TIE-ROD DETAILS
REVISIONS SHA / FHWA	
FHWA APPROVAL DATE:	STANDARD NO. SHEET 1 OF 2

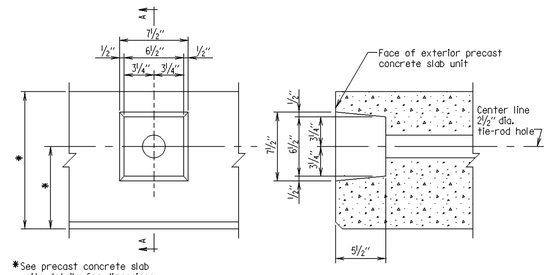

*See precast concrete slab units details for dimensions.

ELEVATION

SECTION A-A

TIE-ROD RECESS DETAILS - TYPE A
Scale: 1½" = 1'-0"

Notes:
1. Recesses and pockets to be grouted with non-shrink grout.
2. Shear keys not shown for clarity.

APPROVAL	STATE OF MARYLAND DEPARTMENT OF TRANSPORTATION STATE HIGHWAY ADMINISTRATION OFFICE OF BRIDGE DEVELOPMENT
DIRECTOR OFFICE OF BRIDGE DEVEL. DATE:	PRECAST CONCRETE SLAB UNITS TIE-ROD RECESS DETAILS FOR EXTERIOR UNITS
REVISIONS SHA / FHWA	
FHWA APPROVAL DATE:	STANDARD NO. SHEET 2 OF 2

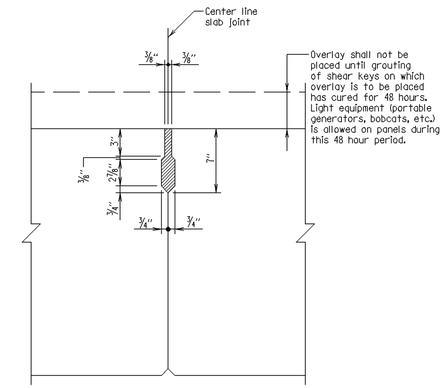

SECTION AT SHEAR KEY
Scale: 1½" = 1'-0"

Notes:
1. After lateral tie rods have been placed and tensioned, shear keys shall be filled with nonshrink grout (shown hatched).
2. All nonshrink grout shall conform to 902.11(C).
3. Shear keys shall not be placed on the exposed face of the exterior slab units unless where specifically called for on the plans to accomodate future widenings.

APPROVAL	STATE OF MARYLAND DEPARTMENT OF TRANSPORTATION STATE HIGHWAY ADMINISTRATION OFFICE OF BRIDGE DEVELOPMENT
DIRECTOR OFFICE OF BRIDGE DEVEL. DATE:	PRECAST CONCRETE SLAB PANEL SHEAR KEY DETAILS
REVISIONS SHA / FHWA	
FHWA APPROVAL DATE:	STANDARD NO. SHEET 1 OF 1

SHEET CONCRETE WORK

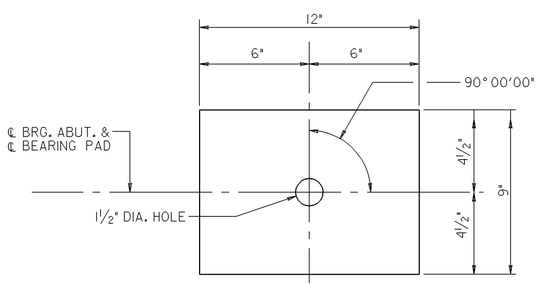

ELASTOMERIC BEARING PAD - PLAN
SCALE: 3" = 1'-0"

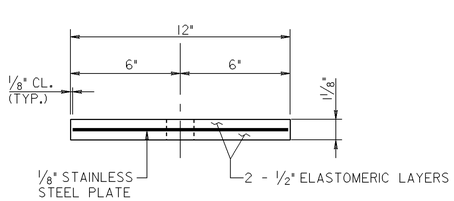

ELASTOMERIC BEARING PAD - ELEVATION
SCALE: 3" = 1'-0"

NOTES:

1. BEARINGS SHALL BE PLACED PERPENDICULAR TO THE CENTER LINE SLABS.
2. ELASTOMERIC BEARINGS SHALL BE 60 DUROMETER HARDNESS.
3. MAXIMUM DESIGN LOAD: 37 KIPS PER PAD.
4. PLACE TWO BEARING PADS AT EACH END OF 4'-0" SLAB.

S-28

REVISIONS	STATE OF MARYLAND DEPARTMENT OF TRANSPORTATION STATE HIGHWAY ADMINISTRATION OFFICE OF BRIDGE DEVELOPMENT PRESTRESSED CONCRETE SLAB PANEL BRIDGE NO. 19005 ON MD 362 (MOUNT VERNON ROAD) OVER MONIE CREEK TIE ROD, SHEAR KEY, AND BEARING PAD DETAILS
	SCALE AS SHOWN DATE OCT., 2008 CONTRACT SO4215180
	DESIGNED BY W.N.P. DRAWN BY SHA CHECKED BY JCN E.S.F. 10-14-08
	SHEET NO. 41 OF 50

OTHER CONTRACTS FOR THIS STRUCTURE

STRUCTURE INVENTORY NO. 1900500

SURVEY BOOK NO. 31496

S:\CADD\OBD\1900500\041_19005trsk.dgn
PRINT DATE: Tuesday, October 06, 2009 at 8:42:10 AM

INDEXED

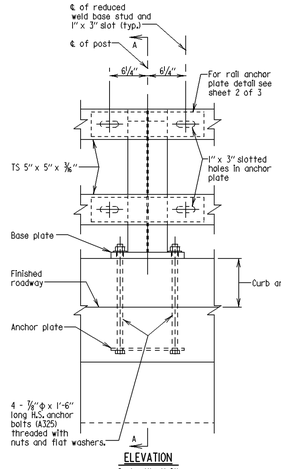

Note:
For Section A-A see sheet 2 of 3.

ELEVATION
Scale: 1" = 1'-0"

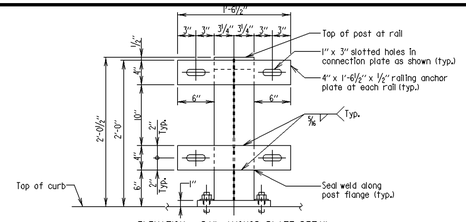

ELEVATION - RAIL ANCHOR PLATE DETAIL
Scales: 1" = 1'-0"

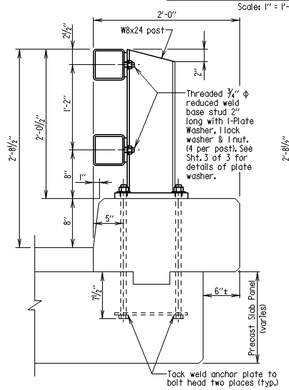

SECTION A-A (PRECAST SLAB PANEL)
Scales: 1" = 1'-0"

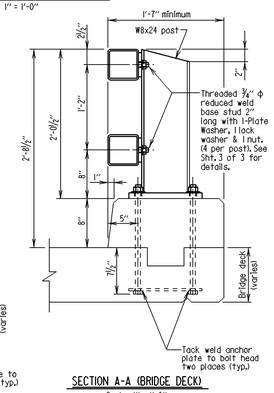

SECTION A-A (BRIDGE DECK)
Scales 1" = 1'-0"

GENERAL NOTES:
1. All railings shall be fabricated and erected as indicated on the Plans.
2. Rails shall be parallel to the grade of the roadway. Rail sections shall be attached to as many posts as possible, but not less than two.
3. The center line of any splice and/or expansion joint shall be located at least 2'-0" away from center line of a post except where indicated otherwise on Plans. Expansion and/or splice joints for each strand of two strand railing shall be placed in the same location and in the same panel.
4. Rail elements shall be square structural tubing in accordance with ASTM A500 Grade B, A618 or A501.
5. Steel posts and plates shall conform to ASTM A36 unless otherwise noted.
6. Posts shall be set perpendicular to top of curb. For post spacing see Plans (Maximum 10'-0" Spacing).
7. All structural steel including fasteners shall be hot-dip galvanized as per ASTM A-123 after fabrication, except as noted.
8. All open ends of rails to be capped.
9. IN SETTING ANCHOR BOLTS BE SURE ENOUGH THREADS ARE EXPOSED SO THAT NUTS CAN BE COMPLETELY ATTACHED.

Note:
For anchor bolt length and curb reinforcing details see standard no. BR-SS(6.59)-07-376 for bridge decks or BR-SS(6.60)-07-377 for precast slab panels.

APPROVAL	STATE OF MARYLAND DEPARTMENT OF TRANSPORTATION STATE HIGHWAY ADMINISTRATION OFFICE OF BRIDGE DEVELOPMENT	SUPER-RAILING-BARRIER
1999-CHOH DIRECTOR OFFICE OF BRIDGE DEVEL. DATE: 2/8/07	TWO STRAND STRUCTURAL TUBE RAIL CURB MOUNTED - ELEVATION	
REVISIONS SHA FHWA 11-26-07		
FHWA APPROVAL DATE:	STANDARD NO. BR-SS(5.07)-07-375 SHEET 1 OF 3	

TL-4 BRIDGE RAILING

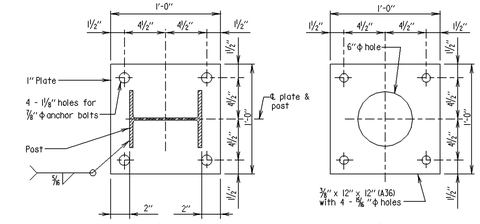

PLAN
BASE PLATE DETAIL
Scales 3" = 1'-0"

PLAN
ANCHOR PLATE DETAIL
Scales 3" = 1'-0"

THE CONTRACTOR IS ALERTED THAT THE ANCHOR PLATES MUST BE TO SET TO AVOID CONFLICT WITH THE DOWEL HOLES IN THE EXTERIOR SLABS AT THE RAIL POST LOCATIONS NEAR THE CENTER LINE OF BEARING.

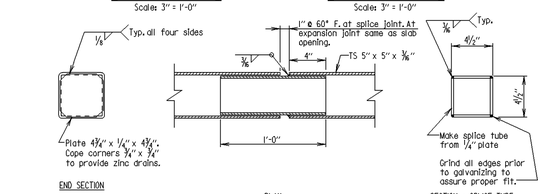

RAIL CAP DETAIL
Scales 3" = 1'-0"

RAIL SPLICE DETAILS
Scales 3" = 1'-0"

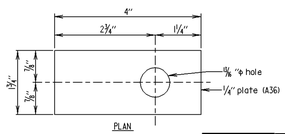

PLAN
PLATE WASHER
Scales 6" = 1'-0"

Notes
Position washers to completely cover slotted hole.

APPROVAL	STATE OF MARYLAND DEPARTMENT OF TRANSPORTATION STATE HIGHWAY ADMINISTRATION OFFICE OF BRIDGE DEVELOPMENT	SUPER-RAILING-BARRIER
1999-CHOH DIRECTOR OFFICE OF BRIDGE DEVEL. DATE: 2/8/07	TWO STRAND STRUCTURAL TUBE RAIL CURB MOUNTED - DETAILS	
REVISIONS SHA FHWA 11-26-07		
FHWA APPROVAL DATE:	STANDARD NO. BR-SS(5.07)-07-375 SHEET 2 OF 3	

TL-4 BRIDGE RAILING

APPROVAL	STATE OF MARYLAND DEPARTMENT OF TRANSPORTATION STATE HIGHWAY ADMINISTRATION OFFICE OF BRIDGE DEVELOPMENT	SUPER-RAILING-BARRIER
1999-CHOH DIRECTOR OFFICE OF BRIDGE DEVEL. DATE: 2/8/07	TWO STRAND STRUCTURAL TUBE RAIL CURB MOUNTED - DETAILS	
REVISIONS SHA FHWA 11-26-07		
FHWA APPROVAL DATE:	STANDARD NO. BR-SS(5.07)-07-375 SHEET 3 OF 3	

TL-4 BRIDGE RAILING

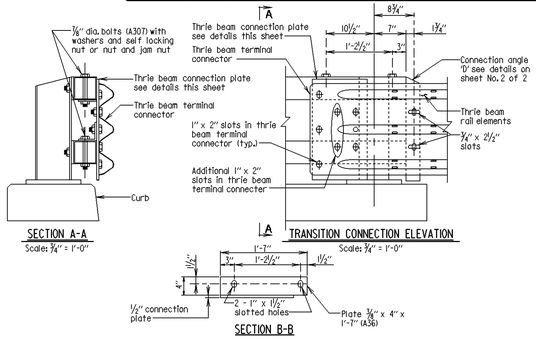

SECTION A-A
Scale: ¾" = 1'-0"

TRANSITION CONNECTION ELEVATION
Scale: ¾" = 1'-0"

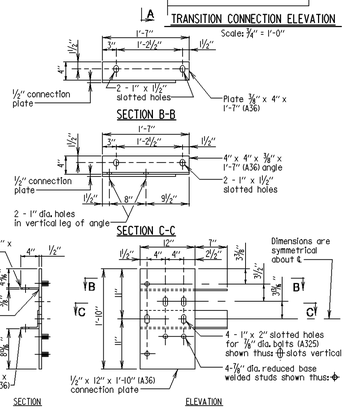

CONNECTION PLATE DETAILS
Scale: ¾" = 1'-0"

Notes
See Std. No. MD 605.51-01 for additional details.

APPROVAL	STATE OF MARYLAND DEPARTMENT OF TRANSPORTATION STATE HIGHWAY ADMINISTRATION OFFICE OF BRIDGE DEVELOPMENT	SUPER-RAILING-BARRIER
1999-CHOH DIRECTOR OFFICE OF BRIDGE DEVEL. DATE: 2/28/07	THRIE BEAM CONNECTION PLATE	
REVISIONS SHA FHWA		
FHWA APPROVAL DATE:	STANDARD NO. BR-SS(5.08)-07-384 SHEET 1 OF 2	

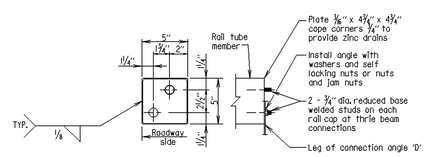

RAIL CAP DETAIL
Scale: ¾" = 1'-0"

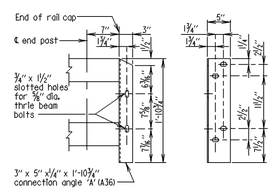

CONNECTION ANGLE 'D'
Scale: ¾" = 1'-0"

APPROVAL	STATE OF MARYLAND DEPARTMENT OF TRANSPORTATION STATE HIGHWAY ADMINISTRATION OFFICE OF BRIDGE DEVELOPMENT	SUPER-RAILING-BARRIER
1999-CHOH DIRECTOR OFFICE OF BRIDGE DEVEL. DATE: 2/28/07	THRIE BEAM CONNECTION PLATE	
REVISIONS SHA FHWA		
FHWA APPROVAL DATE:	STANDARD NO. BR-SS(5.08)-07-384 SHEET 2 OF 2	

NOTE:
FOR DETAILS OF THRIE BEAM ANCHORAGE AT BRIDGE END POST, SEE STANDARD NO. MD-605.41-01.

FOR RAIL POST SPACING, SEE SHEET S-1.

S-29

REVISIONS	STATE OF MARYLAND DEPARTMENT OF TRANSPORTATION STATE HIGHWAY ADMINISTRATION OFFICE OF BRIDGE DEVELOPMENT
	PRESTRESSED CONCRETE SLAB PANEL BRIDGE NO. 19005 ON MD 362 (MOUNT VERNON ROAD) OVER MONIE CREEK RAILING AND THRIE BEAM DETAILS
	SCALE AS SHOWN DATE OCT., 2008 CONTRACT SO4215180
	DESIGNED BY W.N.P., S.H.A.
	DRAWN BY S.H.A.
	CHECKED BY JCN
	E.S.F. 10-14-08
	SHEET NO. 42 OF 50

OTHER CONTRACTS FOR THIS STRUCTURE

STRUCTURE INVENTORY NO. 1900500

SURVEY BOOK NO. 31496

S:\CADD\OBD\1900500\042_19005r&tbdet.dgn
PRINT DATE: Tuesday, October 06, 2009 at 8:42:47 AM

INDEXED

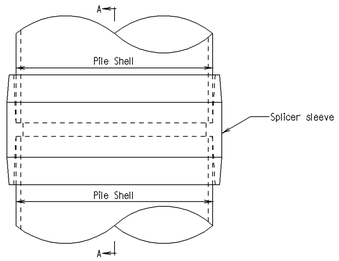

ELEVATION OF SPLICE
(USING SPLICER SLEEVE)
Scale: 3" = 1'-0"

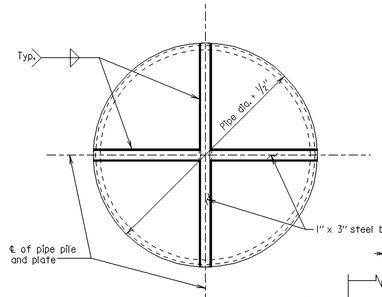

PLAN
Scale: 1½" = 1'-0"

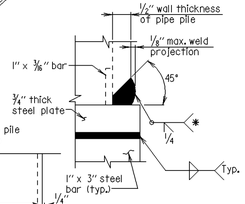

SECTION A-A
Scale: ½" = 1'-0"

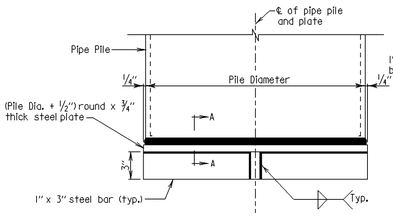

ELEVATION
Scale: 1½" = 1'-0"

NOTE:
PILE POINT TO BE USED AT ABUTMENT AND PIERS

* End of weld to be smooth and flush with pipe pile wall out. ¼" min. effective throat.

Notes:
1. Plate to be welded to pile with a continuous single bevel groove weld along outside face of pile.
2. Exterior face of pile to be flame cut beveled at 45°, prior to welding.
3. Steel to be A-36.

APPROVAL	STATE OF MARYLAND DEPARTMENT OF TRANSPORTATION STATE HIGHWAY ADMINISTRATION OFFICE OF BRIDGE DEVELOPMENT
DEPUTY CHIEF ENGR. BRIDGE DEVEL. DATE:	PILE POINT FOR PIPE PILE
REVISIONS SHA / FHWA	
FHWA APPROVAL DATE:	SHEET __ OF __

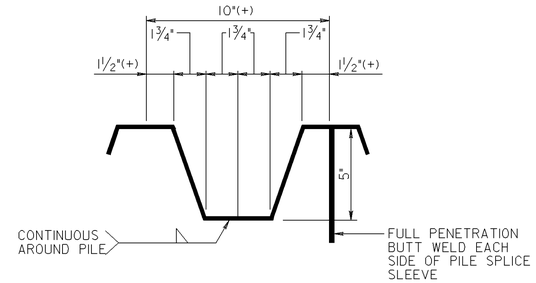

TYPICAL NOTCH DETAIL
SCALE: 3"=1'-0"

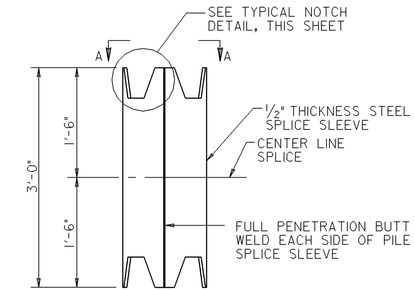

SPLICE SLEEVE – ELEVATION
SCALE: 1"=1'-0"

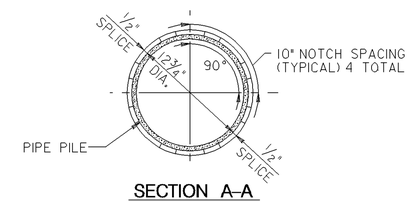

SECTION A-A
SCALE: 1½"=1'-0"

MOMENT NOTCH PILE SPLICE DETAILS

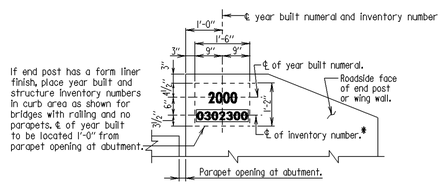

If end post has a form liner finish, place year built and structure inventory numbers in curb area as shown for bridges with railing and no parapets. ℄ of year built to be located 1'-0" from parapet opening at abutment.

BRIDGES WITH PARAPET

Location: Dual Bridges-Each Approach End (Outside Shoulder). Single Bridge - Approach End - North or East corner. Where bridge has a concrete parapet and no definitive end post, place year built marking and structure inventory number on face of parapet as close to center line of bearing at abutment as practical.

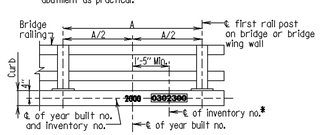

BRIDGES WITH RAILING AND NO PARAPETS

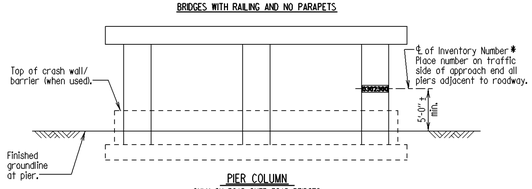

PIER COLUMN
ONLY ON ROAD OVER ROAD BRIDGES

*Black numbers 3" high on a painted white background, (5" x 11").

Notes:
1. For existing structures, where a year built is shown on the structure and structure is to be rehabilitated, the marking should read 1942-2000 (old year first - new year).
2. For existing structures with no year built contact the Office of Bridge Development for old year.
3. For Year Built Numerals refer to Standard No. M(0.07)-99-334.

APPROVAL	STATE OF MARYLAND DEPARTMENT OF TRANSPORTATION STATE HIGHWAY ADMINISTRATION OFFICE OF BRIDGE DEVELOPMENT
DEPUTY CHIEF ENGR. BRIDGE DEVEL. DATE: 9/14/99	LOCATION OF YEAR BUILT MARKING AND STRUCTURE INVENTORY NUMBER ON BRIDGES
REVISIONS SHA / FHWA: 3-10-00, 12-7-00, 1-22-01	
FHWA APPROVAL DATE:	NO. M(0.04)-99-331 SHEET __ OF __

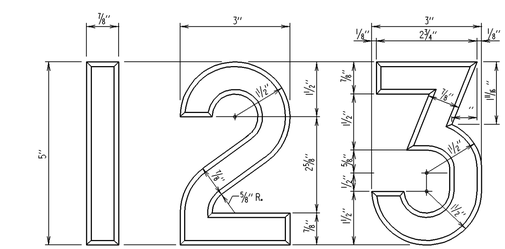

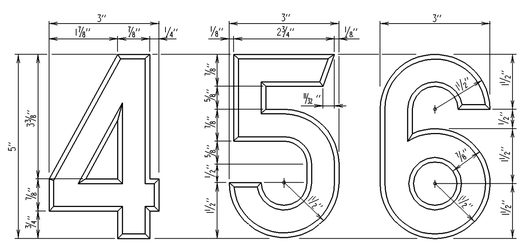

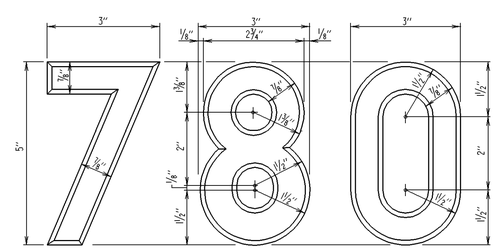

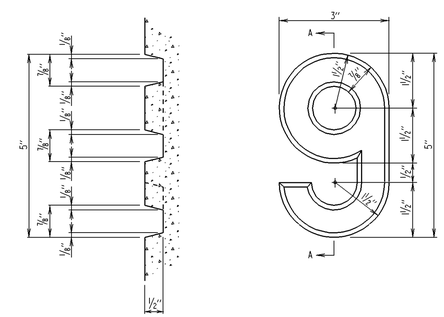

SECTION A-A

Note:
Year built numerals to be indented into concrete (unpainted) - as indicated on Standard Nos. M(0.04)-99-331, M(0.05)-99-332 and M(0.06)-99-333.

APPROVAL	STATE OF MARYLAND DEPARTMENT OF TRANSPORTATION STATE HIGHWAY ADMINISTRATION OFFICE OF BRIDGE DEVELOPMENT
DEPUTY CHIEF ENGR. BRIDGE DEVEL. DATE: 9/14/99	NUMERALS FOR YEAR BUILT MARKING ON STRUCTURES
REVISIONS SHA / FHWA	
FHWA APPROVAL DATE:	NO. M(0.07)-99-334 SHEET 1 OF 2

APPROVAL	STATE OF MARYLAND DEPARTMENT OF TRANSPORTATION STATE HIGHWAY ADMINISTRATION OFFICE OF BRIDGE DEVELOPMENT
DEPUTY CHIEF ENGR. BRIDGE DEVEL. DATE: 9/14/99	NUMERALS FOR YEAR BUILT MARKING ON STRUCTURES
REVISIONS SHA / FHWA	
FHWA APPROVAL DATE:	NO. M(0.07)-99-334 SHEET 2 OF 2

S-30

REVISIONS

STATE OF MARYLAND
DEPARTMENT OF TRANSPORTATION
STATE HIGHWAY ADMINISTRATION
OFFICE OF BRIDGE DEVELOPMENT

PRESTRESSED CONCRETE SLAB PANEL
BRIDGE NO. 19005
ON MD 362 (MOUNT VERNON ROAD)
OVER MONIE CREEK
STANDARD DETAILS

SCALE AS SHOWN DATE OCT., 2008 CONTRACT SO4215180

DESIGNED BY W.N.P.
DRAWN BY
CHECKED BY JCN
E.S.F.
10-14-08

SHEET NO. 43 OF 50

OTHER CONTRACTS FOR THIS STRUCTURE

STRUCTURE INVENTORY NO. 1900500

SURVEY BOOK NO. 31496

S:\CADD\OBD\1900500\043_19005s01.dgn
PRINT DATE: Tuesday, October 06, 2009 at 8:43:44 AM

INDEXED

HOOKS TABLE I REFERENCES

1. ACI Types 1 thru 26
2. SHA Standard Pin Bending
3. SHA Radius Bending

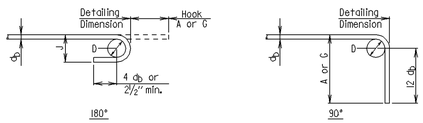

RECOMMENDED END HOOKS, ALL GRADES				
BAR SIZE	Finished bend diameter D, in.	180 - deg hook A or G in	180 - deg hook J, in.	90 - deg hook A or G in
#3	2¼	5	3	6
#4	3	6	4	8
#5	3¾	7	5	10
#6	4½	8	6	1-0
#7	5¼	10	7	1-2
#8	6	11	8	1-4
#9	9½	1-3	11¾	1-7
#10	10¾	1-5	1-1¼	1-10
#11	12	1-7	1-2¾	2-0
#14	18¼	2-3	1-9¾	2-7
#18	24	3-0	2-4½	3-5

APPROVAL	STATE OF MARYLAND DEPARTMENT OF TRANSPORTATION STATE HIGHWAY ADMINISTRATION OFFICE OF BRIDGE DEVELOPMENT
DEPUTY CHIEF ENGR. BRIDGE DEVEL. DATE: 11/17/97	REINFORCING STEEL HOOK TABLES AND DIAGRAMS
REVISIONS SHA / FHWA	NO. REBAR-BD(9.05)-97-320 SHEET 1 OF 2
FHWA APPROVAL DATE:	

HOOKS TABLE II REFERENCES

1. ACI Types S1 thru S11
2. ACI Types T1 thru T8
3. SHA Ties and Stirrups

(Note: Tie and stirrup types supplied in sizes #3-#8)

STIRRUP AND TIE HOOKS

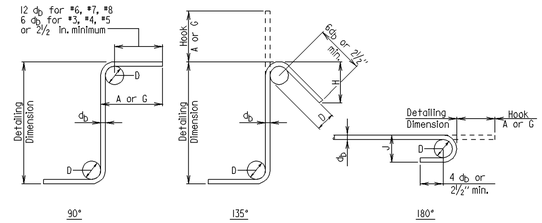

STIRRUP AND TIE HOOK DIMENSIONS, in.				
BAR SIZE	D, in.	90 - deg hook A or G	135 - deg hook A or G	135 - deg hook H, approx
#3	1½	4	4	2½
#4	2	4½	4½	3
#5	2½	6	5½	3¾
#6	4½	1-0	7¾	4½
#7	5¼	1-2	9	5¼
#8	6	1-4	10¼	6

RECOMMENDED END HOOKS, ALL GRADES		
BAR SIZE	Finished bend diameter D, in.	180 - deg hook A or G in	180 - deg hook J, in.
#3	2¼	5	3
#4	3	6	4
#5	3¾	7	5
#6	4½	8	6
#7	5¼	10	7
#8	6	11	8

APPROVAL	STATE OF MARYLAND DEPARTMENT OF TRANSPORTATION STATE HIGHWAY ADMINISTRATION OFFICE OF BRIDGE DEVELOPMENT
DEPUTY CHIEF ENGR. BRIDGE DEVEL. DATE: 11/17/97	REINFORCING STEEL HOOK TABLES AND DIAGRAMS
REVISIONS SHA 12-19-97 / FHWA	NO. REBAR-BD(9.05)-97-320 SHEET 2 OF 2
FHWA APPROVAL DATE:	

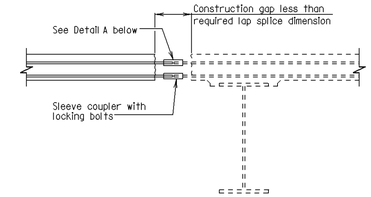

PROPOSED DECK WIDENING — EXISTING BRIDGE DECK

SECTION THROUGH SLAB
Scale: 1" = 1'-0"

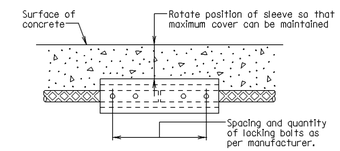

DETAIL A
Scale: 3" = 1'-0"

Notes:
1. The coupler must develop a minimum of 125% of the specified yield strength of the reinforcing bar being spliced.
2. Couplers used to connect epoxy coated reinforcing bars must be epoxy coated.
3. The uncoated surface of the sheared off indicator bolt must be covered with epoxy prepared from an approved epoxy touchup kit.
4. Longitudinal deck reinforcing steel is not shown.
5. Existing slab shown dashed.
6. These couplers will not be measured for payment, but all costs thereof shall be included in the Contract lump sum price for the pertinent Reinforcing Steel Items.

APPROVAL	STATE OF MARYLAND DEPARTMENT OF TRANSPORTATION STATE HIGHWAY ADMINISTRATION OFFICE OF BRIDGE DEVELOPMENT
DIRECTOR OFFICE OF BRIDGE DEVEL. DATE: 8/7/98	SPLICING TO EXISTING STEEL MECHANICAL SPLICE
REVISIONS SHA / FHWA	NO. M(6.01)-75-12 SHEET 2 OF 2
FHWA APPROVAL DATE:	

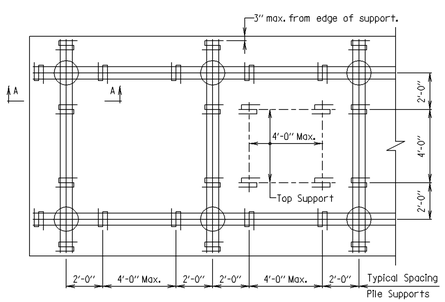

PLAN - PILES (SHOWING MAXIMUM SPACING OF BAR SUPPORTS)
Scale: ¼" = 1'-0"

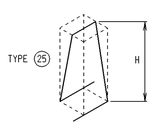

ISOMETRIC VIEW

SEE TYPICAL BAR SHEET FOR DIMENSIONS

SIZE	HEIGHT
#4	0'-7" ≤ H ≤ 1'-6"
#5	1'-6" ≤ H ≤ 3'-6"

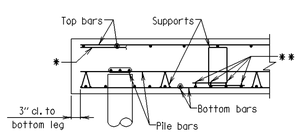

** Tie each base leg at two intersections to bottom footing bars for stability.

SECTION A-A
Scale: None

* Top bar cannot be dropped to act as a support bar. If support bar is required, separate #5 bars are to be used.

DIMENSIONS AND QUANTITIES TO BE SUPPLIED BY CONTRACTOR

APPROVAL	STATE OF MARYLAND DEPARTMENT OF TRANSPORTATION STATE HIGHWAY ADMINISTRATION OFFICE OF BRIDGE DEVELOPMENT
DEPUTY CHIEF ENGR. BRIDGE DEVEL. DATE: 3/7/91	REINFORCING BAR STANDARD FOOTING SUPPORT SYSTEM
REVISIONS SHA / FHWA	NO. REBAR-PL(1.01)-91-251 SHEET 1 OF 1
FHWA APPROVAL DATE:	

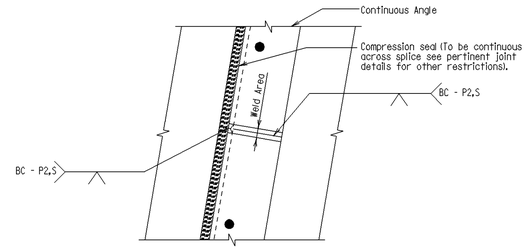

PLAN
JOINT AT ABUTMENTS - WHERE ONE SIDE OF JOINT IS ARMORED
Scale: None

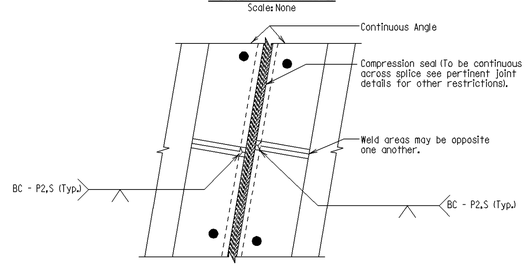

PLAN
JOINT AT PIERS AND ABUTMENTS - WHERE BOTH SIDES OF JOINTS ARE ARMORED
Scale: None

Note:
Whenever possible the need for this splice should be limited. Preferably, the minimum spacing between joints shall be 40'. If there are breaks in the crown or if the joint is skewed; splices may be made at all breaks in slope and may follow the direction of centerline of bridge instead of being perpendicular to center line of bearing.

APPROVAL	STATE OF MARYLAND DEPARTMENT OF TRANSPORTATION STATE HIGHWAY ADMINISTRATION OFFICE OF BRIDGE DEVELOPMENT
CHIEF OFFICE OF BRIDGE DEVEL. DATE: 1/14/87	ROADWAY JOINT ANGLE SHOP SPLICES FOR NON-SEQUENTIAL CONSTRUCTION
REVISIONS SHA 1-22-01 / FHWA	STANDARD NO. BR-SS(7.15)-86-198 SHEET 1 OF 1
FHWA APPROVAL DATE: 6-8-90	

S-31

REVISIONS	STATE OF MARYLAND DEPARTMENT OF TRANSPORTATION STATE HIGHWAY ADMINISTRATION OFFICE OF BRIDGE DEVELOPMENT
	PRESTRESSED CONCRETE SLAB PANEL BRIDGE NO. 19005 ON MD 362 (MOUNT VERNON ROAD) OVER MONIE CREEK STANDARD DETAILS
	SCALE AS SHOWN DATE OCT., 2008 CONTRACT SO4215180
	DESIGNED BY W.N.P. DRAWN BY CHECKED BY JCN
	E.S.F. 10-14-08
	SHEET NO. 44 OF 50

OTHER CONTRACTS FOR THIS STRUCTURE _____ _____

STRUCTURE INVENTORY NO. 1900500 | SURVEY BOOK NO. 31496 | S:\CADD\OBD\1900500\044_19005s02.dgn PRINT DATE: Tuesday, October 06, 2009 at 8:44:24 AM | INDEXED

BAR SIZE	* LOCATION CATEGORY		
	A	B	C
#4	2'-5"	1'-9"	1'-5"
#5	3'-0"	2'-2"	1'-9"
#6	3'-7"	2'-7"	2'-1"
#7	4'-10"	3'-6"	2'-10"
#8	6'-5"	4'-7"	3'-8"
#9	8'-1"	5'-9"	4'-8"
#10	10'-3"	7'-4"	5'-11"
#11	12'-7"	9'-0"	7'-3"

*** LOCATION CATEGORY**

A - Bars in horizontal layers in top of pour with 12" or more of concrete below them such as in: footings, pier caps, etc.
B - All bars not in Category A spaced less than 6" apart.
C - All bars not in Category A spaced 6" or more apart.

Note:
1. When bar lap is not specified on the Plans, the above dimensions shall be used.
2. These bar laps do not apply when bar is in lightweight concrete. Greater lengths are required for this material.
3. These bar laps only apply where the General Notes indicate "Reinforcing Steel Design, fs= 24,000 p.s.i."

APPROVAL — E.S.Freeman DEPUTY CHIEF ENGR. BRIDGE DEVEL. — DATE: 4/30/81
REVISIONS: SHA 2-2-90, 2-11-92, 11-23-93, 1-22-01; FHWA 11-23-93, 1-22-01
FHWA APPROVAL DATE: 6-8-90

STATE OF MARYLAND
DEPARTMENT OF TRANSPORTATION
STATE HIGHWAY ADMINISTRATION
OFFICE OF BRIDGE DEVELOPMENT
BAR LAP DIMENSIONS FOR
GRADE 60 REINFORCING STEEL
IN MIX NO.3 (3500 P.S.I.) CONCRETE
NON-EPOXY COATED REINFORCING
NO. M(6.07)-81-127 SHEET 1 OF 3

BAR SIZE	* LOCATION CATEGORY			3 Times Bar Diameter	6 Times Bar Diameter	= c/c Spacing
	A	B	C			
#4	2'-11"	2'-7"	2'-1"	1½"	3"	3½"
#5	3'-8"	3'-3"	2'-7"	1⅞"	3¾"	4⅜"
#6	4'-5"	3'-10"	3'-1"	2¼"	4½"	5¼"
#7	5'-11"	5'-3"	4'-2"	2⅝"	5¼"	6⅛"
#8	7'-9"	6'-10"	5'-6"	3"	6"	7"
#9	9'-10"	8'-8"	6'-11"	3⅜"	6¾"	7⅞"
#10	12'-5"	11'-0"	8'-10"	3¾"	7⅝"	8⅞"
#11	15'-3"	13'-6"	10'-10"	4¼"	8½"	9⅞"

*** LOCATION CATEGORY**

A - Bars in horizontal layers in top of pour with 12" or more of concrete below them such as in: footings, pier caps, etc.
B - All bars not in Category A spaced less than 6" apart.
C - All bars not in Category A spaced 6" or more apart.

Note:
1. When bar lap is not specified on the Plans, the above dimensions shall be used.
2. These bar laps do not apply when bar is in lightweight concrete. Greater lengths are required for this material.
3. These bar laps only apply where the General Notes indicate "Reinforcing Steel Design, fs= 24,000 p.s.i."

CASE NO.1 - For bars coated with epoxy with cover less than 3 times the bar diameter or clear spacing between bars less than 6 times the bar diameter.

APPROVAL — E.S.Freeman DEPUTY CHIEF ENGR. BRIDGE DEVEL. — DATE: 2/2/90
REVISIONS: SHA 2-10-92, 11-23-93, 1-22-01; FHWA
FHWA APPROVAL DATE:

STATE OF MARYLAND
DEPARTMENT OF TRANSPORTATION
STATE HIGHWAY ADMINISTRATION
OFFICE OF BRIDGE DEVELOPMENT
BAR LAP DIMENSIONS FOR
GRADE 60 REINFORCING STEEL
IN MIX NO.3 (3500 P.S.I.) CONCRETE
EPOXY COATED REINFORCING CASE NO.1
NO. M(6.07)-81-127 SHEET 2 OF 3

BAR SIZE	* LOCATION CATEGORY		
	A	B	C
#4	2'-9"	2'-0"	1'-7"
#5	3'-6"	2'-6"	2'-0"
#6	4'-2"	3'-0"	2'-5"
#7	5'-7"	Does Not Exist	3'-3"
#8	7'-4"		4'-3"
#9	9'-4"		5'-4"
#10	11'-10"		6'-9"
#11	14'-6"		8'-3"

*** LOCATION CATEGORY**

A - Bars in horizontal layers in top of pour with 12" or more of concrete below them such as in: footings, pier caps, etc.
B - All bars not in Category A spaced less than 6" apart.
C - All bars not in Category A spaced 6" or more apart.

Note:
1. When bar lap is not specified on the Plans, the above dimensions shall be used.
2. These bar laps do not apply when bar is in lightweight concrete. Greater lengths are required for this material.
3. These bar laps only apply where the General Notes indicate "Reinforcing Steel Design, fs= 24,000 p.s.i."

CASE NO.2 - For bars coated with epoxy not in Case No. 1.

APPROVAL — E.S.Freeman DEPUTY CHIEF ENGR. BRIDGE DEVEL. — DATE: 2/2/90
REVISIONS: SHA 2-10-92, 11-23-93, 1-22-01
FHWA APPROVAL DATE:

STATE OF MARYLAND
DEPARTMENT OF TRANSPORTATION
STATE HIGHWAY ADMINISTRATION
OFFICE OF BRIDGE DEVELOPMENT
BAR LAP DIMENSIONS FOR
GRADE 60 REINFORCING STEEL
IN MIX NO.3 (3500 P.S.I.) CONCRETE
EPOXY COATED REINFORCING CASE NO.2
NO. M(6.07)-81-127 SHEET 3 OF 3

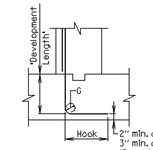

STANDARD 90° HOOK

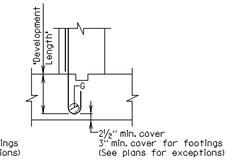

STANDARD 180° HOOK

BAR SIZE	* LOCATION CATEGORY		
	D	E	F
#4	8"	11"	9"
#5	9"	1'-1"	11"
#6	11"	1'-4"	1'-1"
#7	1'-1"	1'-6"	1'-3"
#8	1'-3"	1'-9"	1'-5"
#9	1'-5"	1'-11"	1'-7"
#10	1'-7"	2'-2"	1'-9"
#11	1'-9"	2'-5"	1'-11"

BAR SIZE	RECOMMENDED END HOOKS ALL GRADES		
	Finished bend diameter G in.	180 Degree hooks	90 Degree hooks
#4	3"	6"	8"
#5	3¾"	7"	10"
#6	4½"	8"	1'-0"
#7	5¼"	10"	1'-2"
#8	6"	11"	1'-4"
#9	9½"	1'-3"	1'-7"
#10	10¾"	1'-5"	1'-10"
#11	1'-0"	1'-7"	2'-0"

* LOCATION CATEGORY:

D- All bars terminating with a standard 180° hook with side cover (normal to plane of hook) not less than 2½", and for 90° deg. hook, cover on bar extension beyond hook not less than 2".
E- All bars not in Category D.
F- All bars with hook enclosed vertically or horizontally within ties or stirrup-ties spaced along the full development length not greater than 3d where d is the diameter of the hooked bar.

Note:
1. When development length is not specified on the Plans, the above dimensions shall be used.
2. These development lengths do not apply when bar is in lightweight concrete or any other strength of concrete.
3. These development lengths only apply where the General Notes indicate "Reinforcing Steel Design, fs= 24,000 p.s.i."
4. If depth of member does not allow bar development length indicated in Categories A, B, and C: then hook shall be added to all bars not conforming, as per D, E & F.

APPROVAL — E.S.Freeman DEPUTY CHIEF ENGR. BRIDGE DEVEL. — DATE: 4/4/86
REVISIONS: SHA 2-2-90, 2-22-93, 11-23-93, 1-22-01
FHWA APPROVAL DATE: 6-8-90

STATE OF MARYLAND
DEPARTMENT OF TRANSPORTATION
STATE HIGHWAY ADMINISTRATION
OFFICE OF BRIDGE DEVELOPMENT
DEVELOPMENT LENGTH DIMENSIONS OF HOOKED
BARS FOR GRADE 60 REINFORCING STEEL
IN MIX NO. 3 (3500 P.S.I.) CONCRETE
NO. M(6.08)-86-178 SHEET 1 OF 1

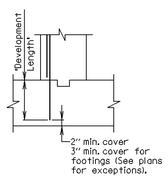

STANDARD STRAIGHT BAR

BAR SIZE	* LOCATION CATEGORY		
	A	B	C
#4	1'-5"	1'-0"	1'-0"
#5	1'-9"	1'-3"	1'-0"
#6	2'-2"	1'-6"	1'-3"
#7	2'-11"	2'-1"	1'-8"
#8	3'-9"	2'-9"	2'-2"
#9	4'-9"	3'-5"	2'-9"
#10	6'-1"	4'-4"	3'-6"
#11	7'-5"	5'-4"	4'-3"

* LOCATION CATEGORY:

A- Bars in horizontal layers in top of pour with 12" or more of concrete below them such as in: footings, pier caps, etc.
B- All bars not in Category A spaced less than 6" apart.
C- All bars not in Category A spaced 6" or more apart.

Note:
1. When development length is not specified on the Plans, the above dimensions shall be used.
2. These development lengths do not apply when bar is in lightweight concrete or any other strength of concrete.
3. These development lengths only apply where the General Notes indicate "Reinforcing Steel Design, fs= 24,000 p.s.i."
4. If depth of member does not allow bar development length indicated in Categories A, B, and C: then hook shall be added to all bars not conforming, as per D, E, and F per Std. No. M(6.08)-86-178.

APPROVAL — E.S.Freeman DEPUTY CHIEF ENGR. BRIDGE DEVEL. — DATE: 2/2/90
REVISIONS: SHA 11-23-93, 1-22-01
FHWA APPROVAL DATE:

STATE OF MARYLAND
DEPARTMENT OF TRANSPORTATION
STATE HIGHWAY ADMINISTRATION
OFFICE OF BRIDGE DEVELOPMENT
DEVELOPMENT LENGTH DIMENSIONS FOR
GRADE 60 REINFORCING STEEL
IN MIX NO.3 (3500 P.S.I.) CONCRETE
NON-EPOXY COATED REINFORCING
NO. M(6.14)-90-214 SHEET 1 OF 3

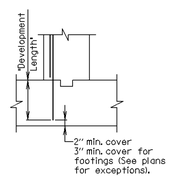

STANDARD STRAIGHT BAR

BAR SIZE	* LOCATION CATEGORY			3 Times Bar Diameter	6 Times Bar Diameter	= c/c Spacing
	A	B	C			
#4	1'-9"	1'-6"	1'-3"	1½"	3"	3½"
#5	2'-2"	1'-11"	1'-6"	1⅞"	3¾"	4⅜"
#6	2'-7"	2'-3"	1'-10"	2¼"	4½"	5¼"
#7	3'-6"	3'-1"	2'-6"	2⅝"	5¼"	6⅛"
#8	4'-7"	4'-1"	3'-3"	3"	6"	7"
#9	5'-9"	5'-1"	4'-1"	3⅜"	6¾"	7⅞"
#10	7'-4"	6'-6"	5'-2"	3¾"	7⅝"	8⅞"
#11	9'-0"	7'-11"	6'-4"	4¼"	8½"	9⅞"

* LOCATION CATEGORY:

A- Bars in horizontal layers in top of pour with 12" or more of concrete below them such as in: footings, pier caps, etc.
B- All bars not in Category A spaced less than 6" apart.
C- All bars not in Category A spaced 6" or more apart.

Note:
1. When development length is not specified on the Plans, the above dimensions shall be used.
2. These development lengths do not apply when bar is in lightweight concrete or any other strength of concrete.
3. These development lengths only apply where the General Notes indicate "Reinforcing Steel Design, fs= 24,000 p.s.i."

CASE NO.1 - For bars coated with epoxy with cover less than 3 times the bar diameter or clear spacing between bars less than 6 times the bar diameter.

APPROVAL — E.S.Freeman DEPUTY CHIEF ENGR. BRIDGE DEVEL. — DATE: 2/2/90
REVISIONS: SHA 2-10-92, 11-23-93, 1-22-01; FHWA
FHWA APPROVAL DATE:

STATE OF MARYLAND
DEPARTMENT OF TRANSPORTATION
STATE HIGHWAY ADMINISTRATION
OFFICE OF BRIDGE DEVELOPMENT
DEVELOPMENT LENGTH DIMENSIONS FOR
GRADE 60 REINFORCING STEEL
IN MIX NO.3 (3500 P.S.I.) CONCRETE
EPOXY COATED REINFORCING CASE NO.1
NO. M(6.14)-90-214 SHEET 2 OF 3

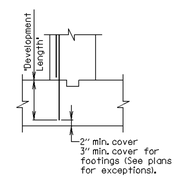

STANDARD STRAIGHT BAR

BAR SIZE	* LOCATION CATEGORY		
	A	B	C
#4	1'-8"	1'-2"	1'-0"
#5	2'-1"	1'-6"	1'-2"
#6	2'-5"	1'-9"	1'-5"
#7	3'-4"	Does Not Exist	1'-11"
#8	4'-4"		2'-6"
#9	5'-6"		3'-2"
#10	6'-11"		4'-0"
#11	8'-6"		4'-11"

* LOCATION CATEGORY:

A- Bars in horizontal layers in top of pour with 12" or more of concrete below them such as in: footings, pier caps, etc.
B- All bars not in Category A spaced less than 6" apart.
C- All bars not in Category A spaced 6" or more apart.

Note:
1. When development length is not specified on the Plans, the above dimensions shall be used.
2. These development lengths do not apply when bar is in lightweight concrete or any other strength of concrete.
3. These development lengths only apply where the General Notes indicate "Reinforcing Steel Design, fs= 24,000 p.s.i."

CASE NO.2 - For bars coated with epoxy not in Case No. 1.

APPROVAL — E.S.Freeman DEPUTY CHIEF ENGR. BRIDGE DEVEL. — DATE: 2/2/90
REVISIONS: SHA 2-10-92, 11-23-93, 1-22-01
FHWA APPROVAL DATE:

STATE OF MARYLAND
DEPARTMENT OF TRANSPORTATION
STATE HIGHWAY ADMINISTRATION
OFFICE OF BRIDGE DEVELOPMENT
DEVELOPMENT LENGTH DIMENSIONS FOR
GRADE 60 REINFORCING STEEL
IN MIX NO.3 (3500 P.S.I.) CONCRETE
EPOXY COATED REINFORCING CASE NO.2
NO. M(6.14)-90-214 SHEET 3 OF 3

S-32

REVISIONS

STATE OF MARYLAND
DEPARTMENT OF TRANSPORTATION
STATE HIGHWAY ADMINISTRATION
OFFICE OF BRIDGE DEVELOPMENT
PRESTRESSED CONCRETE SLAB PANEL
BRIDGE NO. 19005
ON MD 362 (MOUNT VERNON ROAD)
OVER MONIE CREEK
STANDARD DETAILS

SCALE AS SHOWN DATE OCT., 2008 CONTRACT SO4215180

DESIGNED BY S.H.A.
DRAWN BY S.H.A.
CHECKED BY S.H.A.
E.S.F.
10-14-08

SHEET NO. 45 OF 50

INDEXED

OTHER CONTRACTS FOR THIS STRUCTURE

STRUCTURE INVENTORY NO. 1900500 SURVEY BOOK NO. 31496

S:\CADD\OBD\1900500\045_19005s03.dgn
PRINT DATE: Tuesday, October 06, 2009 at 8:44:53 AM

BAR SIZE	* LOCATION CATEGORY		
	A	B	C
#4	2'-5"	1'-9"	1'-5"
#5	3'-0"	2'-2"	1'-9"
#6	3'-7"	2'-7"	2'-1"
#7	4'-4"	3'-1"	2'-6"
#8	5'-8"	4'-1"	3'-3"
#9	7'-2"	5'-1"	4'-1"
#10	9'-1"	6'-6"	5'-2"
#11	11'-1"	7'-11"	6'-4"

*** LOCATION CATEGORY**

A - Bars in horizontal layers in top of pour with 12" or more of concrete below them such as in: footings, pier caps, etc.
B - All bars not in Category A spaced less than 6" apart.
C - All bars not in Category A spaced 6" or more apart.

Note:
1. When bar lap is not specified on the Plans, the above dimensions shall be used.
2. These bar laps do not apply when bar is in lightweight concrete. Greater lengths are required for this material.
3. These bar laps only apply where the General Notes indicate "Reinforcing Steel Design, fs= 24,000 p.s.i."

APPROVAL: E.E. Fisher DEPUTY CHIEF ENGR. BRIDGE DEVEL. DATE: 4/30/8
REVISIONS: SHA 2-2-90, 11-23-93, 1-22-01 | FHWA
FHWA APPROVAL DATE: 6-8-90

STATE OF MARYLAND
DEPARTMENT OF TRANSPORTATION
STATE HIGHWAY ADMINISTRATION
OFFICE OF BRIDGE DEVELOPMENT
BAR LAP DIMENSIONS FOR
GRADE 60 REINFORCING STEEL
IN MIX NO. 6 (4500 P.S.I.) CONCRETE
NON-EPOXY COATED REINFORCING
NO. M(6.05)-80-122 SHEET 1 OF 3

BAR SIZE	* LOCATION CATEGORY			3 Times Bar Diameter	6 Times Bar Diameter	= c/c Spacing
	A	B	C			
#4	2'-11"	2'-7"	2'-1"	1 1/2"	3"	3 1/2"
#5	3'-8"	3'-3"	2'-7"	1 7/8"	3 3/4"	4 3/8"
#6	4'-5"	3'-10"	3'-1"	2 1/4"	4 1/2"	5 1/4"
#7	5'-3"	4'-7"	3'-8"	2 5/8"	5 1/4"	6 1/8"
#8	6'-10"	6'-1"	4'-10"	3"	6"	7"
#9	8'-8"	7'-8"	6'-1"	3 3/8"	6 3/4"	7 7/8"
#10	11'-0"	9'-8"	7'-9"	3 3/4"	7 5/8"	8 7/8"
#11	13'-6"	11'-11"	9'-6"	4 1/4"	8 1/2"	9 7/8"

*** LOCATION CATEGORY**

A - Bars in horizontal layers in top of pour with 12" or more of concrete below them such as in: footings, pier caps, etc.
B - All bars not in Category A spaced less than 6" apart.
C - All bars not in Category A spaced 6" or more apart.

Note:
1. When bar lap is not specified on the Plans, the above dimensions shall be used.
2. These bar laps do not apply when bar is in lightweight concrete. Greater lengths are required for this material.
3. These bar laps only apply where the General Notes indicate "Reinforcing Steel Design, fs= 24,000 p.s.i."

CASE NO.1 - For bars coated with epoxy with cover less than 3 times the bar diameter or clear spacing between bars less than 6 times the bar diameter.

APPROVAL: E.E. Fisher DEPUTY CHIEF ENGR. BRIDGE DEVEL. DATE: 2/2/90
REVISIONS: SHA 2-10-92, 11-23-93, 1-22-01 | FHWA
FHWA APPROVAL DATE:

STATE OF MARYLAND
DEPARTMENT OF TRANSPORTATION
STATE HIGHWAY ADMINISTRATION
OFFICE OF BRIDGE DEVELOPMENT
BAR LAP DIMENSIONS FOR
GRADE 60 REINFORCING STEEL
IN MIX NO. 6 (4500 P.S.I.) CONCRETE
EPOXY COATED REINFORCING CASE NO.1
NO. M(6.05)-80-122 SHEET 2 OF 3

BAR SIZE	* LOCATION CATEGORY		
	A	B	C
#4	2'-9"	2'-0"	1'-7"
#5	3'-6"	2'-6"	2'-0"
#6	4'-2"	3'-0"	2'-5"
#7	4'-11"	Does Not Exist	2'-10"
#8	6'-6"		3'-9"
#9	8'-2"		4'-8"
#10	10'-5"		6'-0"
#11	12'-9"		7'-4"

*** LOCATION CATEGORY**

A - Bars in horizontal layers in top of pour with 12" or more of concrete below them such as in: footings, pier caps, etc.
B - All bars not in Category A spaced less than 6" apart.
C - All bars not in Category A spaced 6" or more apart.

Note:
1. When bar lap is not specified on the Plans, the above dimensions shall be used.
2. These bar laps do not apply when bar is in lightweight concrete. Greater lengths are required for this material.
3. These bar laps only apply where the General Notes indicate "Reinforcing Steel Design, fs= 24,000 p.s.i."

CASE NO.2 - For bars coated with epoxy not in Case No. 1.

APPROVAL: E.E. Fisher DEPUTY CHIEF ENGR. BRIDGE DEVEL. DATE: 2/2/90
REVISIONS: SHA 2-10-92, 11-23-93, 1-22-01 | FHWA
FHWA APPROVAL DATE:

STATE OF MARYLAND
DEPARTMENT OF TRANSPORTATION
STATE HIGHWAY ADMINISTRATION
OFFICE OF BRIDGE DEVELOPMENT
BAR LAP DIMENSIONS FOR
GRADE 60 REINFORCING STEEL
IN MIX NO. 6 (4500 P.S.I.) CONCRETE
EPOXY COATED REINFORCING CASE NO.2
NO. M(6.05)-80-122 SHEET 3 OF 3

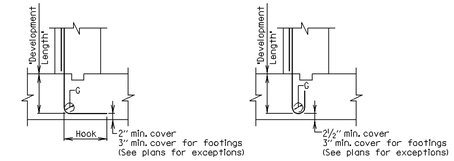

STANDARD 90° HOOK

STANDARD 180° HOOK

BAR SIZE	* LOCATION CATEGORY		
	D	E	F
#4	7"	9"	8"
#5	8"	1'-0"	9"
#6	10"	1'-2"	11"
#7	11"	1'-4"	1'-1"
#8	1'-1"	1'-6"	1'-3"
#9	1'-3"	1'-9"	1'-6"
#10	1'-4"	1'-11"	1'-7"
#11	1'-6"	2'-2"	1'-9"

RECOMMENDED END HOOKS ALL GRADES			
BAR SIZE	Finished bend diameter 6 in.	180 Degree hooks	90 Degree hooks
#4	3"	6"	8"
#5	3 3/4"	7"	10"
#6	4 1/2"	8"	1'-0"
#7	5 1/4"	10"	1'-2"
#8	6"	11"	1'-4"
#9	9 1/2"	1'-3"	1'-7"
#10	10 3/4"	1'-5"	1'-10"
#11	1'-0"	1'-7"	2'-0"

* LOCATION CATEGORY:

D- All bars terminating with a standard 180° hook with side cover (normal to plane of hook) not less than 2 1/2", and for 90° deg. hook, cover on bar extension beyond hook not less than 2".
E- All bars not in Category D.
F- All bars with hook enclosed vertically or horizontally within ties or stirrup-ties spaced along the full development length not greater than 3d where d is the diameter of the hooked bar.

Note:
1. When development length is not specified on the Plans, the above dimensions shall be used.
2. These development lengths do not apply when bar is in lightweight concrete or any other strength of concrete.
3. These development lengths only apply where the General Notes indicate "Reinforcing Steel Design, fs= 24,000 p.s.i."
4. If depth of member does not allow bar development length indicated in Categories A, B, and C: Std. No. M(6.16)-90-216; then hook shall be added to all bars not conforming, as per D, E & F.

APPROVAL: E.E. Fisher DEPUTY CHIEF ENGR. BRIDGE DEVEL. DATE: 4/4/86
REVISIONS: SHA 2-2-90, 2-22-93, 1-22-01 | FHWA
FHWA APPROVAL DATE: 6-8-90

STATE OF MARYLAND
DEPARTMENT OF TRANSPORTATION
STATE HIGHWAY ADMINISTRATION
OFFICE OF BRIDGE DEVELOPMENT
DEVELOPMENT LENGTH DIMENSIONS OF HOOKED
BARS FOR GRADE 60 REINFORCING STEEL
IN MIX NO. 6 (4500 P.S.I.) CONCRETE
NO. M(6.10)-86-180 SHEET 1 OF 1

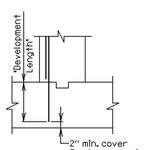

STANDARD STRAIGHT BAR

BAR SIZE	* LOCATION CATEGORY		
	A	B	C
#4	1'-5"	1'-0"	1'-0"
#5	1'-9"	1'-3"	1'-0"
#6	2'-2"	1'-6"	1'-0"
#7	2'-7"	1'-10"	1'-6"
#8	3'-4"	2'-5"	1'-11"
#9	4'-3"	3'-0"	2'-5"
#10	5'-4"	3'-10"	3'-1"
#11	6'-7"	4'-8"	3'-9"

* LOCATION CATEGORY:

A- Bars in horizontal layers in top of pour with 12" or more of concrete below them such as in: footings, pier caps, etc.
B- All bars not in Category A spaced less than 6" apart.
C- All bars not in Category A spaced 6" or more apart.

Note:
1. When development length is not specified on the Plans, the above dimensions shall be used.
2. These development lengths do not apply when bar is in lightweight concrete or any other strength of concrete.
3. These development lengths only apply where the General Notes indicate "Reinforcing Steel Design, fs= 24,000 p.s.i."
4. If depth of member does not allow bar development length indicated in Categories A, B, and C; then hook shall be added to all bars not conforming, as per D, E, and F per Std. No. M(6.10)-86-180.

APPROVAL: E.E. Fisher DEPUTY CHIEF ENGR. BRIDGE DEVEL. DATE: 2/2/90
REVISIONS: SHA 11-23-93, 1-22-01 | FHWA
FHWA APPROVAL DATE:

STATE OF MARYLAND
DEPARTMENT OF TRANSPORTATION
STATE HIGHWAY ADMINISTRATION
OFFICE OF BRIDGE DEVELOPMENT
DEVELOPMENT LENGTH DIMENSIONS FOR
GRADE 60 REINFORCING STEEL
IN MIX NO. 6 (4500 P.S.I.) CONCRETE
NON-EPOXY COATED REINFORCING
NO. M(6.16)-90-216 SHEET 1 OF 3

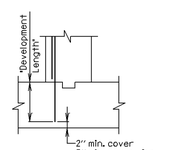

STANDARD STRAIGHT BAR

BAR SIZE	* LOCATION CATEGORY			3 Times Bar Diameter	6 Times Bar Diameter	= c/c Spacing
	A	B	C			
#4	1'-9"	1'-6"	1'-3"	1 1/2"	3"	3 1/2"
#5	2'-2"	1'-11"	1'-6"	1 7/8"	3 3/4"	4 3/8"
#6	2'-7"	2'-3"	1'-10"	2 1/4"	4 1/2"	5 1/4"
#7	3'-1"	2'-9"	2'-2"	2 5/8"	5 1/4"	6 1/8"
#8	4'-1"	3'-7"	2'-10"	3"	6"	7"
#9	5'-1"	4'-6"	3'-7"	3 3/8"	6 3/4"	7 7/8"
#10	6'-6"	5'-9"	4'-7"	3 3/4"	7 5/8"	8 7/8"
#11	7'-11"	7'-0"	5'-7"	4 1/4"	8 1/2"	9 7/8"

* LOCATION CATEGORY:

A- Bars in horizontal layers in top of pour with 12" or more of concrete below them such as in: footings, pier caps, etc.
B- All bars not in Category A spaced less than 6" apart.
C- All bars not in Category A spaced 6" or more apart.

Note:
1. When development length is not specified on the Plans, the above dimensions shall be used.
2. These development lengths do not apply when bar is in lightweight concrete or any other strength of concrete.
3. These development lengths only apply where the General Notes indicate "Reinforcing Steel Design, fs= 24,000 p.s.i."

CASE NO.1 - For bars coated with epoxy with cover less than 3 times the bar diameter or clear spacing between bars less than 6 times the bar diameter.

APPROVAL: E.E. Fisher DEPUTY CHIEF ENGR. BRIDGE DEVEL. DATE: 2/2/90
REVISIONS: SHA 2-10-92, 11-23-93, 1-22-01 | FHWA
FHWA APPROVAL DATE:

STATE OF MARYLAND
DEPARTMENT OF TRANSPORTATION
STATE HIGHWAY ADMINISTRATION
OFFICE OF BRIDGE DEVELOPMENT
DEVELOPMENT LENGTH DIMENSIONS FOR
GRADE 60 REINFORCING STEEL
IN MIX NO. 6 (4500 P.S.I.) CONCRETE
EPOXY COATED REINFORCING CASE NO.1
NO. M(6.16)-90-216 SHEET 2 OF 3

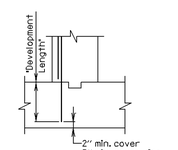

STANDARD STRAIGHT BAR

BAR SIZE	* LOCATION CATEGORY		
	A	B	C
#4	1'-8"	1'-2"	1'-0"
#5	2'-1"	1'-6"	1'-2"
#6	2'-6"	1'-9"	1'-5"
#7	2'-11"	Does Not Exist	1'-8"
#8	3'-10"		2'-3"
#9	4'-10"		2'-9"
#10	6'-2"		3'-6"
#11	7'-6"		4'-4"

* LOCATION CATEGORY:

A- Bars in horizontal layers in top of pour with 12" or more of concrete below them such as in: footings, pier caps, etc.
B- All bars not in Category A spaced less than 6" apart.
C- All bars not in Category A spaced 6" or more apart.

Note:
1. When development length is not specified on the Plans, the above dimensions shall be used.
2. These development lengths do not apply when bar is in lightweight concrete or any other strength of concrete.
3. These development lengths only apply where the General Notes indicate "Reinforcing Steel Design, fs= 24,000 p.s.i."

CASE NO.2 - For bars coated with epoxy not in Case No. 1.

APPROVAL: E.E. Fisher DEPUTY CHIEF ENGR. BRIDGE DEVEL. DATE: 2/2/90
REVISIONS: SHA 2-10-92, 11-23-93, 1-22-01 | FHWA
FHWA APPROVAL DATE:

STATE OF MARYLAND
DEPARTMENT OF TRANSPORTATION
STATE HIGHWAY ADMINISTRATION
OFFICE OF BRIDGE DEVELOPMENT
DEVELOPMENT LENGTH DIMENSIONS FOR
GRADE 60 REINFORCING STEEL
IN MIX NO. 6 (4500 P.S.I.) CONCRETE
EPOXY COATED REINFORCING CASE NO.2
NO. M(6.16)-90-216 SHEET 3 OF 3

S-33

REVISIONS

STATE OF MARYLAND
DEPARTMENT OF TRANSPORTATION
STATE HIGHWAY ADMINISTRATION
OFFICE OF BRIDGE DEVELOPMENT
PRESTRESSED CONCRETE SLAB PANEL
BRIDGE NO. 19005
ON MD 362 (MOUNT VERNON ROAD)
OVER MONIE CREEK
STANDARD DETAILS

SCALE AS SHOWN DATE OCT., 2008 CONTRACT SO4215180

DESIGNED BY W.N.P.
DRAWN BY
CHECKED BY JCN
E.S.F.
10-14-08

SHEET NO. 46 OF 50

INDEXED

OTHER CONTRACTS FOR THIS STRUCTURE

STRUCTURE INVENTORY NO. 1900500

SURVEY BOOK NO. 31496

S:\CADD\OBD\1900500\046_19005s04.dgn
PRINT DATE: Tuesday, October 06, 2009 at 8:45:21 AM

ACI TYPICAL BAR BENDS

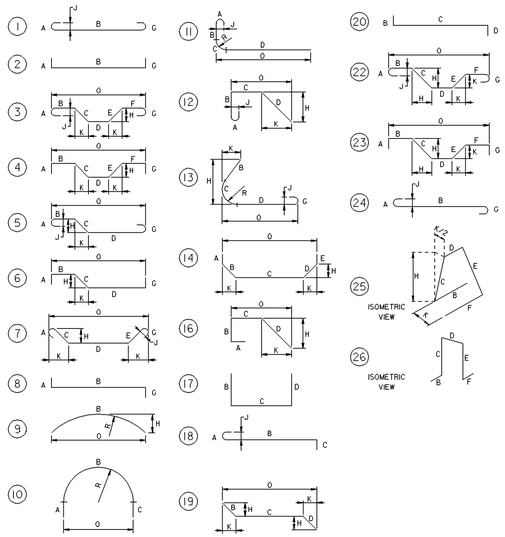

STANDARD PIN BENDING

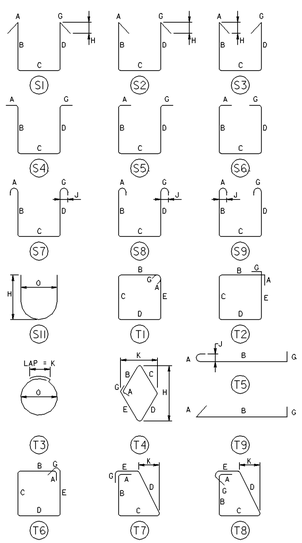

NOTE TO FABRICATOR

BENDING TOLERANCE NOTE

TIES AND STIRRUPS SHALL BE BENT WITH A PLUS ZERO INCH (+0") MINUS (-) NORMAL ACI BENDING TOLERANCES

TIES AND STIRRUPS

SHA TYPICAL BAR BENDS

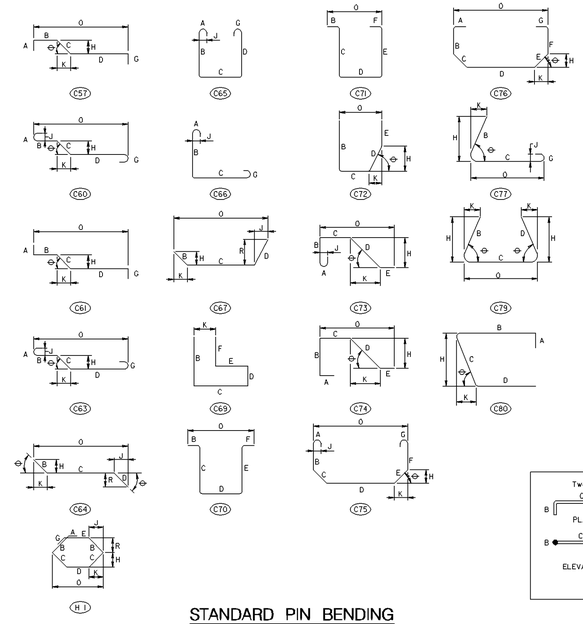

STANDARD PIN BENDING

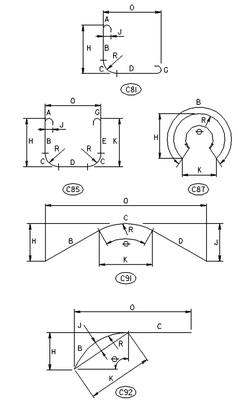

RADIUS BENDING

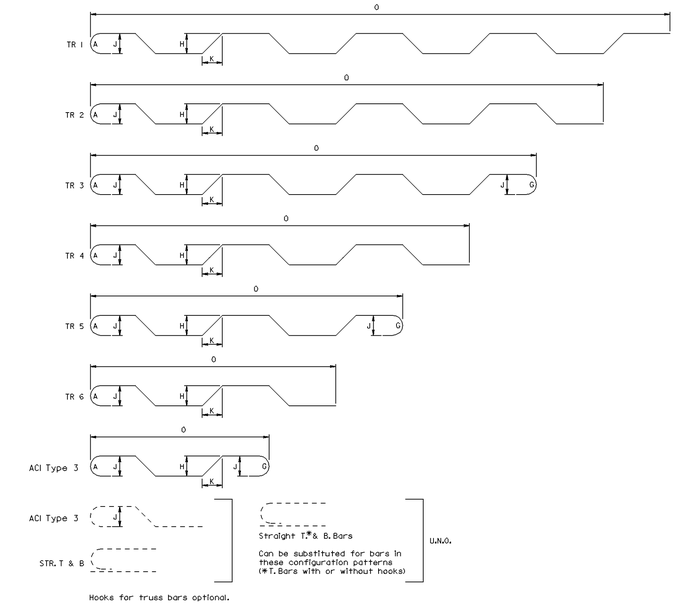

TRUSS BAR CONFIGURATION

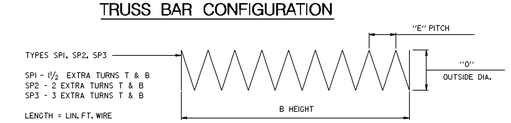

SPIRAL

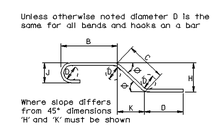

ENLARGED VIEW SHOWING BAR BENDING DETAILS

Notes:
1. All dimensions are out to out of bar or to tangent points for 135° and 180° hooks.
2. 'J' dimensions on 180° hooks to be shown only where necessary to restrict hook size. Otherwise standard hooks are to be used.
3. Where 'J' is not shown, 'J' will be kept equal to or less than 'H' on truss bars. Where 'J' can exceed 'H' it should be shown.
4. 'H' dimension on stirrups to be shown where necessary to fit within concrete.
5. Where bars are to be bent more accurately than standard bending tolerances, bending dimensions which require closer fabrication should have limits indicated.

GENERAL NOTES

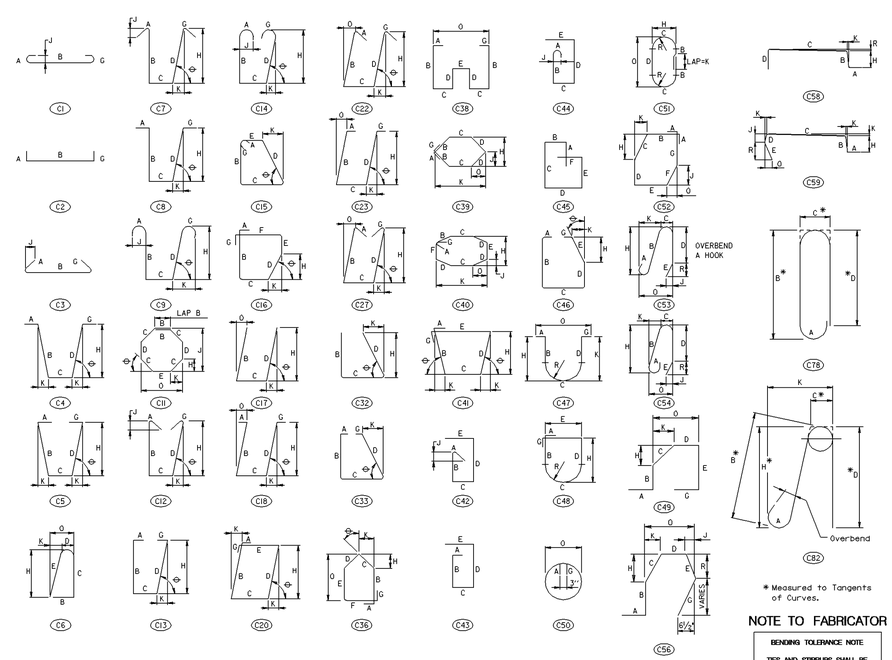

* Measured to Tangents of Curves.

NOTE TO FABRICATOR

BENDING TOLERANCE NOTE

TIES AND STIRRUPS SHALL BE BENT WITH A PLUS ZERO INCH (+0") MINUS (-) NORMAL ACI BENDING TOLERANCES

TIES AND STIRRUPS

S-34

REVISIONS	STATE OF MARYLAND DEPARTMENT OF TRANSPORTATION STATE HIGHWAY ADMINISTRATION OFFICE OF BRIDGE DEVELOPMENT PRESTRESSED CONCRETE SLAB PANEL BRIDGE NO. 19005 ON MD 362 (MOUNT VERNON ROAD) OVER MONIE CREEK STANDARD DETAILS
	SCALE AS SHOWN DATE OCT., 2008 CONTRACT SO4215180
	DESIGNED BY W.N.P. DRAWN BY CHECKED BY JCN E.S.F. 10-14-08
	SHEET NO. 47 OF 50

OTHER CONTRACTS FOR THIS STRUCTURE

STRUCTURE INVENTORY NO. 1900500

SURVEY BOOK NO. 31496

S:\CADD\OBD\1900500\047_19005s05.dgn
PRINT DATE: Tuesday, October 06, 2009 at 8:45:55 AM

INDEXED

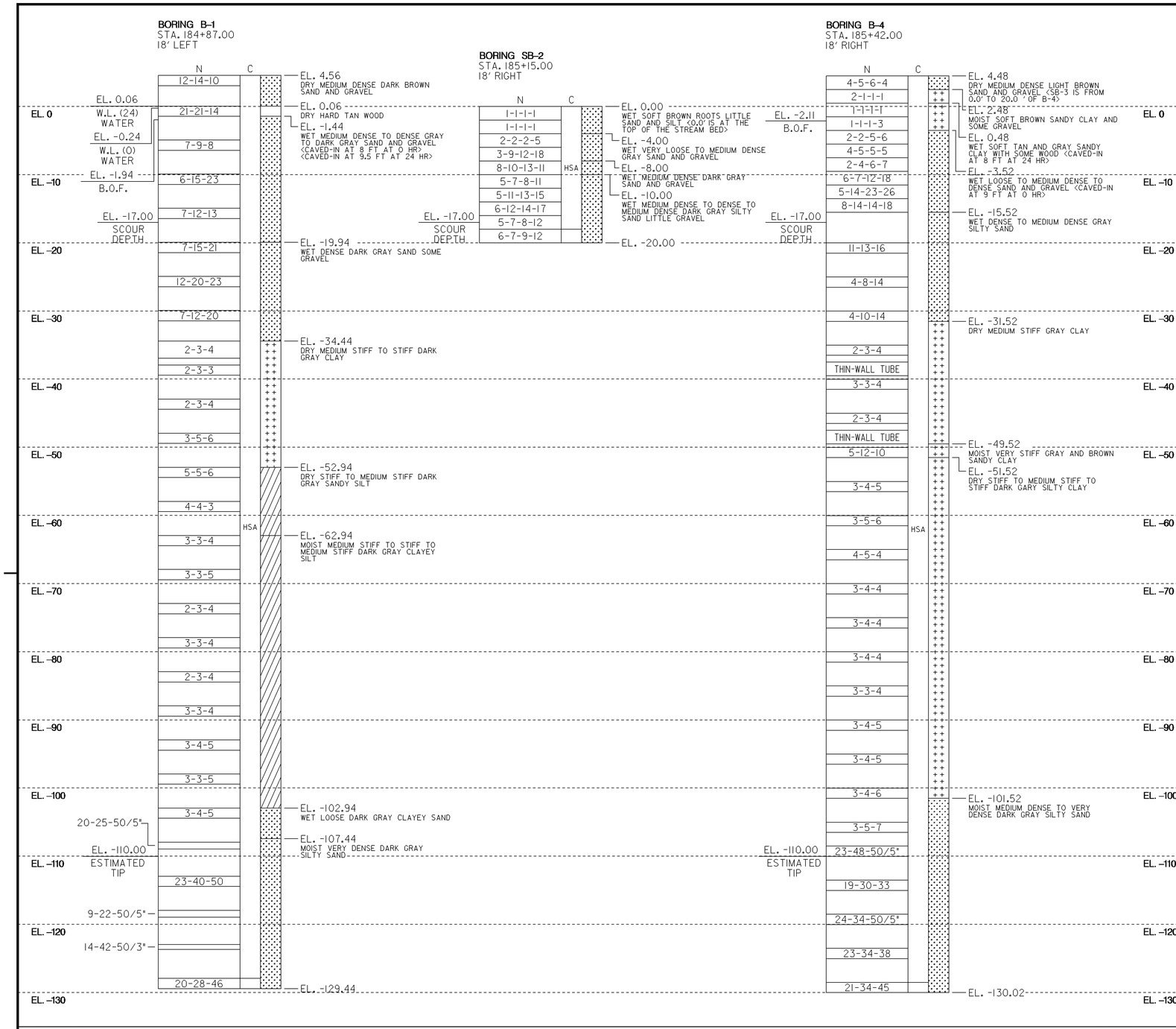

BORINGS AND DRIVE TESTS

SCALE: 1/8" = 1'-0"

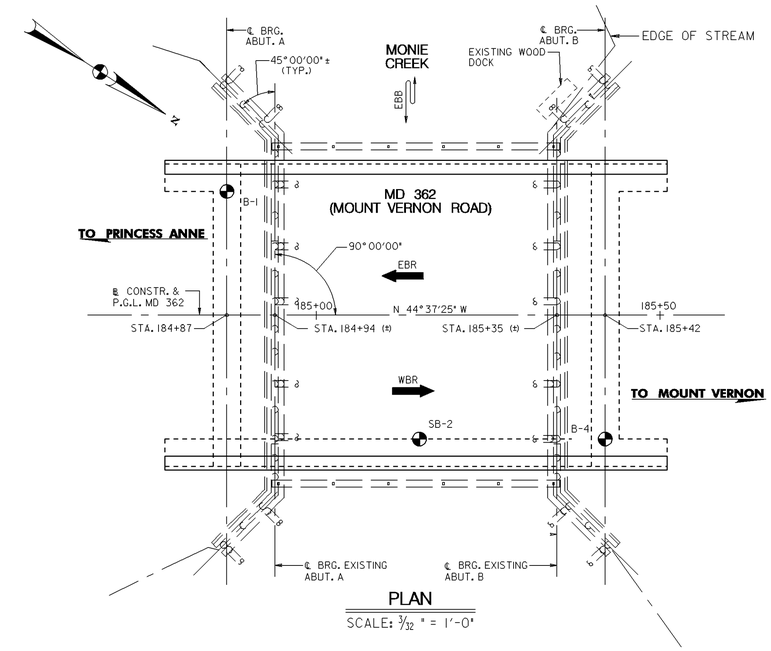

PLAN

SCALE: 3/32" = 1'-0"

NOTES:

1. THE BORINGS AND DRIVE TESTS WERE TAKEN IN SEPTEMBER AND OCTOBER, 2007 BY HILLS-CARNES ENGINEERING ASSOCIATES INC.
2. THE SOIL SYMBOLS REFLECT ONLY THE MAJOR SOIL CONSTITUENT. FOR MORE COMPLETE SOIL CHARACTERISTIC, REFER TO THE SOIL DESCRIPTIVE TEXT.
3. THE FIELD BORING LOGS RECORD SAMPLE SPOON RECOVERY. THE LOGS ARE AVAILABLE UPON REQUEST. THE MATERIAL RECOVERED FROM THE SITE INVESTIGATION IS AVAILABLE FOR REVIEW. CONTACT THE GEOTECHNICAL EXPLORATIONS DIVISION AT 1-800-637-1290.
4. THE FOLLOWING BORINGS WERE RELOCATED DUE TO GUARD RAIL. THE ORIGINAL BORING LOCATIONS WERE: B-1 184+87, 20 FT LT; SB-2 185+15, 20 FT RT; SB-3 185+40, 26 FT RT; B-4 185+42, 20 FT RT.
5. N = BLOWS ON A 2 INCH OD SAMPLING SPOON BY 140 LB. DRIVE-WEIGHT FALLING 30 INCHES INDICATING SUCCESSIVE 6 INCH INCREMENTS OF PENETRATION IN LIEU OF BLOWS PER FOOT. PENETRATIONS GREATER THAN 6 INCHES OR LESS THAN 6 INCHES ARE INDICATED BY WHO, WOR, OR THE DEPTH OF THE PENETRATION OVER 50 (OR NUMBER OF BLOWS IF OTHER THAN 50) OVER THE NEAREST INCH.
6. C = DEPTH OF BW FLUSHJOINT CASING 4 INCH ID.
7. W.L. = WATER LEVEL READING. THE FIGURE IN PARENTHESIS INDICATES THE READING IN HOURS AFTER COMPLETION OF BORING.
8. B.O.F. = BOTTOM OF FOOTING.
9. BORINGS AND SAMPLINGS CONFORM TO AASHTO DESIGNATIONS T-206 AND T-207.
10. THE SOIL HAS BEEN VISUALLY CLASSIFIED BY THE DRILLER.

S-35

REVISIONS

STATE OF MARYLAND
DEPARTMENT OF TRANSPORTATION
STATE HIGHWAY ADMINISTRATION
OFFICE OF BRIDGE DEVELOPMENT

PRESTRESSED CONCRETE SLAB PANEL
BRIDGE NO. 19005
ON MD 362 (MOUNT VERNON ROAD)
OVER MONIE CREEK
FOUNDATION TEST BORINGS

SCALE AS SHOWN DATE OCT., 2008 CONTRACT SO4215180

DESIGNED BY W.N.P.
DRAWN BY GLYNIS
CHECKED BY JCN

E.S.F.
10-14-08

SHEET NO. 48 OF 50

OTHER CONTRACTS FOR THIS STRUCTURE

STRUCTURE INVENTORY NO. 1900500

SURVEY BOOK NO. 31496

S:\CADD\OBD\1900500\048_19005ftb.dgn
PRINT DATE: Tuesday, October 06, 2009 at 8:46:30 AM

INDEXED

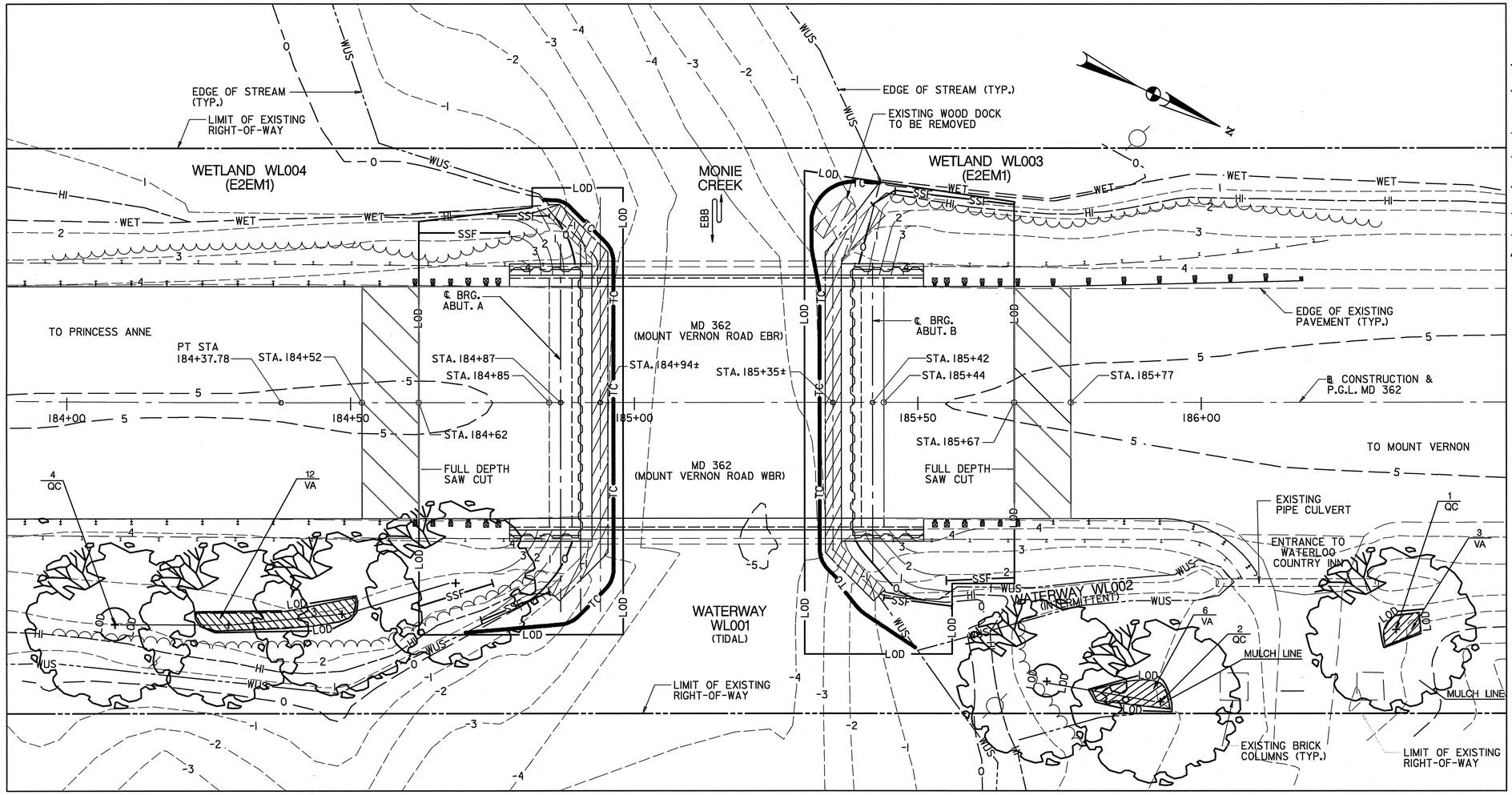

NOTES: SEE SHEET LD-2 FOR PLANT SPACING DETAILS.

LANSCAPE PLAN

SCALE: 1" = 10'-0"

LEGEND:

LOD	
SSF	INDICATES SUPER SILT FENCE
WET	INDICATES WETLAND BOUNDRY
HI	INDICATES MEAN HIGH WATER MARK
WUS	INDICATES WATERS OF THE U.S. & MEAN LOW WATER MARK
	LIMIT OF RIGHT-OF-WAY
5	INDICATES PROPOSED CONTOURS
5	INDICATES EXISTING CONTOURS
TC	INDICATES TURBIDITY CURTAIN
	DENOTES REMOVAL OF EXISTING ABUTMENTS TO THE TOP OF THE SHEET PILING CONCRETE CAP, AFTER PROPOSED ABUTMENTS ARE CONSTRUCTED.
	PROPOSED TREE
	PROPOSED SHRUB

NOTES:

1. PLANT LOCATIONS SHOWN ON PLANS ARE APPROXIMATE. TWO WEEKS PRIOR TO PLANTING, CONTRACTOR SHALL NOTIFY ENGINEER. ENGINEER WILL CONTACT SHA– LANDSCAPE ARCHITECTURE DIVISION TO COORDINATE EXACT LOCATIONS OF PLANTINGS.
2. PLACE ORANGE CONSTRUCTION FENCE ALONG EDGE OF LIMITS OF DISTURBANCE TO PROTECT EXISTING TREES. THE COST OF ORANGE CONSTRUCTION FENCE SHALL BE INCIDENTAL TO THE "CLEARING AND GRUBBING" ITEM.
3. CONTACT MISS UTILITY PRIOR TO PLANT INSTALLATION FOR VERIFICATION OF UNDER GROUND UTILITIES IN THE AREA OF PLANTING.
4. ALL PLANT MATERIAL STAKE-OUT SHALL BE APPROVED BY THE SHA LANDSCAPE PRIOR TO INSTALLATION.
5. THE 7 TREES AND 21 SHRUBS PLANTED EQUAL 2,800 SQ. FT. OF CRITICAL AREA MANAGEMENT MITIGATION. A PART OF THE CRITICAL AREA REQUIREMENT TOTAL THAT EQUALS 17,532 SQ. FT. OR 0.40 ACRES.
6. "THE ENTIRE PLAN VIEW SHOWN (INCLUDING THE ENTIRE LIMIT OF DISTURBANCE) IS WITHIN THE 100' CRITICAL AREA BUFFER."

PLANT SCHEDULE LD-1

KEY	QTY	PLANT NAME	SIZE	ROOT	SPACING
QC	7	QUERUS COCCINEA SCARLET OAK	2" CAL.	B&B	20' O.C.
VA	21	MAPLELEAF VIRBURNUM VIRBURNUM ACERFOLIUM	3'HGT	1 GAL.CONT.	3' O.C.
EDGE OF MULCH BED	18 SY	SHREDDED HARDWOOD BARK MULCH 3" DEPTH			

THIS SHEET FOR PLANTING PURPOSES ONLY

SHA

STATE OF MARYLAND
DEPARTMENT OF TRANSPORTATION
STATE HIGHWAY ADMINISTRATION
LANDSCAPE ARCHITECTURE DIVISION

PRESTRESSED CONCRETE SLAB PANEL BRIDGE NO.19005
ON MD 362 (MOUNT VERNON ROAD) OVER MONIE CREEK

REVISIONS

LANDSCAPE PLAN SHEET

SCALE AS SHOWN ADVERTISED DATE JUNE,2008 CONTRACT NO. SO4215180

DESIGNED BY BRG
DRAWN BY BRG
CHECKED BY JRP
F.A.P. NO. SEE TITLE SHEET

COUNTY SOMERSET
LOGMILE

DRAWING NO. LD-1 OF 1 SHEET NO. 49 OF 50

LEGEND:

LOD — LIMIT OF DISTURBANCE

LIMIT OF RIGHT-OF-WAY

PROPOSED TREES

PROPOSED SHRUB

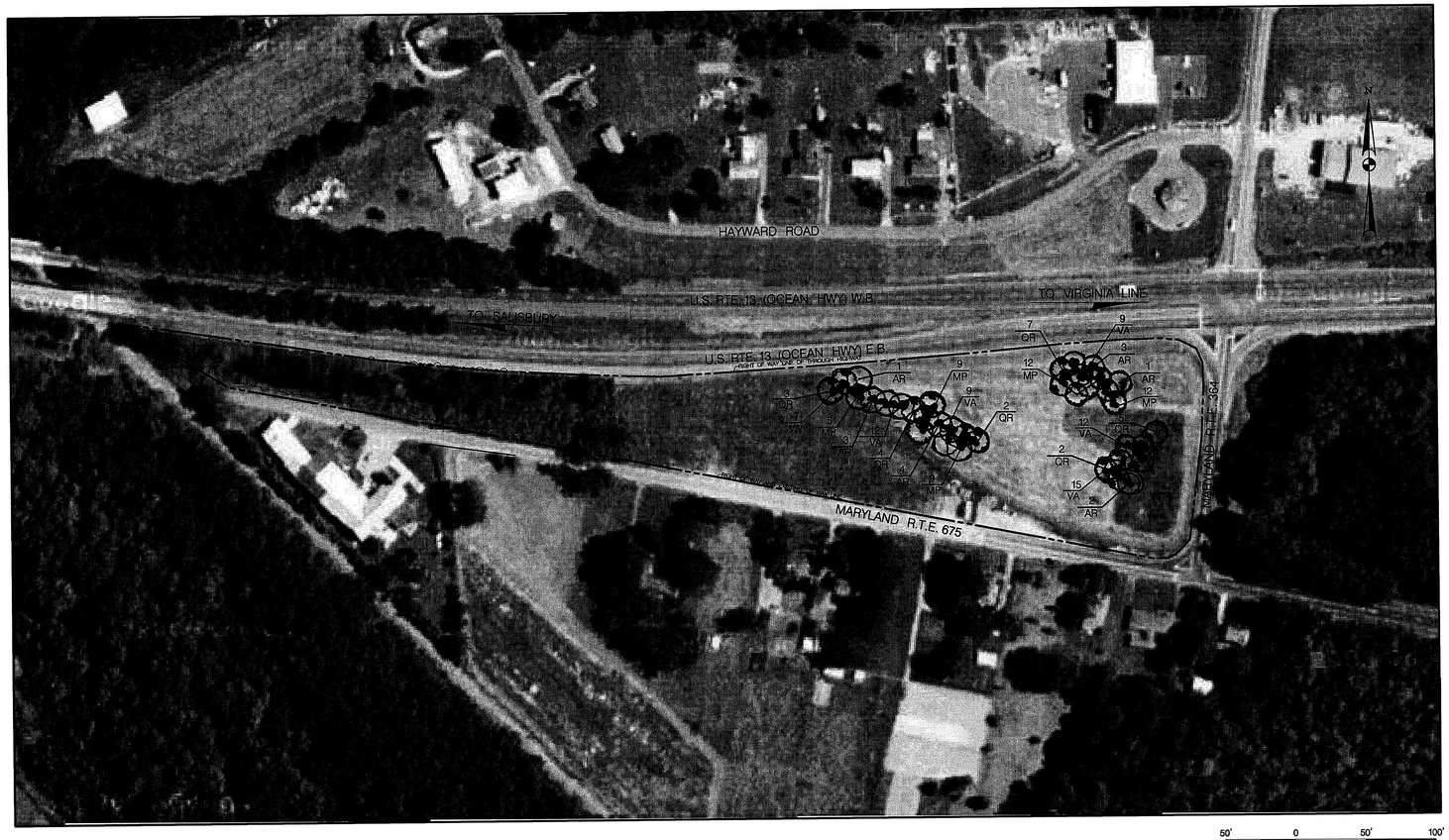

50' 0 50' 100'

SCALE: 1" = 50'

NOTES:

1. PLANT LOCATIONS SHOWN ON PLANS ARE APPROXIMATE. TWO WEEKS PRIOR TO PLANTING, CONTRACTOR SHALL NOTIFY ENGINEER. ENGINEER WILL CONTACT SHA– LANDSCAPE ARCHITECTURE DIVISION TO COORDINATE EXACT LOCATIONS OF PLANTINGS.

2. CONTACT MISS UTILITY PRIOR TO PLANT INSTALLATION FOR VERIFICATION OF UNDER GROUND UTILITIES IN THE AREA OF PLANTING.

3. ALL PLANT MATERIAL STAKE–OUT SHALL BE APPROVED BY THE SHA LANDSCAPE PRIOR TO INSTALLATION.

4. THE 37 TREES AND 111 SHRUBS PLANTED EQUAL 14,800 SQ. FT. OF CRITICAL AREA MITIGATION. A PART OF THE CRITICAL AREA REQUIREMENT TOTAL THAT EQUALS 17,532 SQ. FT. OR 0.40 ACRES.

5. "THE ENTIRE PLAN VIEW SHOWN (INCLUDING THE ENTIRE LIMIT OF DISTURBANCE) IS WITHIN THE 100' CRITICAL AREA BUFFER."

LIMIT OF DISTURBANCE DELINEATION (LOD)

DISTURBANCE INCLUDES THE ENTIRE MULCHED AREA OF A PREPARED PLANTING BED EXTENDING TO THE LIMITS OF THE MULCH

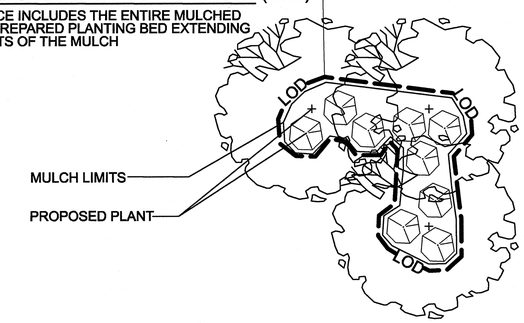

NTS

PLAN VIEW - PREPARED PLANTING BED

PLANT SPACING DETAIL

NOTE

SPACING FOR TREES AND SHRUBS ARE 20' O.C. AND 3-7' O.C. AND WIDTH OF BED ARE AS SHOWN ON THE PLANS OR AS DIRECTED BY THE ENGINEER (1 TREE AND 3 SHRUBS MINIMUM 2-INCH CALIPER TREE EITHER BALLED AND BURLAPPED OR CONTAINER GROWEN) . ONE TREE AND TRREE SHRUBS WILL EQUAL 400 SQ.FT. OF MITIGATION CREDIT.

PLANT SCHEDULE LD–2

QTY.	CODE	SCIENTIFIC NAME	COMMON NAME	SIZE	CONDITION	REMARKS
23	QR	QUERUS RUBRA	NORTHERN RED OAK	2" CAL.	B&B	20' O.C.
14	AR	ACER RUBRUM	RED MAPLE	2" CAL.	B&B	20' O.C.
64	VA	MAPLELEAF VIRBURNUM	VIRBURNUM ACERFOLIUM	18" HGT	#1 CONT.	3' O.C.
47	MP	MYRICA PENSYLVANICA	NORTHNER BAYBERRY	18" HGT	#1 CONT.	3' O.C.
EDGE OF MULCH BED 107SY SHREDDED HARDWOOD BARK MULCH 3" DEPTH						

MASTER PLANT SCHEDULE

QTY.	CODE	SCIENTIFIC NAME	COMMON NAME	SIZE	CONDITION	REMARKS
23	QR	QUERUS RUBRA	NORTHERN RED OAK	2" CAL.	B&B	20' O.C.
14	AR	ACER RUBRUM	RED MAPLE	2" CAL.	B&B	20' O.C.
7	QC	QUERUS COCCINEA	SCARLET OAK	2" CAL.	B&B	20' O.C.
85	VA	MAPLELEAF VIRBURNUM	VIRBURNUM ACERFOLIUM	18" HGT	#1 CONT.	3' O.C.
47	MP	MYRICA PENSYLVANICA	NORTHNER BAYBERRY	18" HGT	#1 CONT.	3' O.C.
EDGE OF MULCH BED 125SY SHREDDED HARDWOOD BARK MULCH 3" DEPTH						

THIS SHEET FOR PLANTING PURPOSES ONLY

BY: bguevara

SHA

STATE OF MARYLAND
DEPARTMENT OF TRANSPORTATION
STATE HIGHWAY ADMINISTRATION
LANDSCAPE ARCHITECTURE DIVISION

CRITICAL AREA MITIGATION FOR BRIDGE NO. 19005
ON MD 362 (MOUNT VERNON ROAD OVER MONIE CREEK)

REVISIONS

LANDSCAPE PLAN

SCALE 1" = 50' ADVERTISED DATE JUNE 2008 CONTRACT NO. SO4215180

DESIGNED BY BRG
DRAWN BY BRG
CHECKED BY JRP
F.A.P. NO. SEE TITLE SHEET

COUNTY SOMERSET
LOGMILE

DRAWING NO. LD-2 OF 2

SHEET NO. 50 OF 50

PLOTTED: Tuesday, September 16, 2008 AT 02:37 PM
FILE: F:\MD362bOverMonie Creek CACRequirements\SO4215180\pLD-P002_USRTE13.dgn